5/1/2020 12:27 PM
RECEIVED FOR RECORD
TORRINGTON TOWN CLERK

CITY OF TORRINGTON

PURCHASING DEPARTMENT
140 Main Street, Room 206
Torrington, CT 06790

Pennie Zucco, Purchasing Agent
Phone: (860)-489-2225
Fax (860)-489-2547
Email: pennie_zucco@torringtonct.org

April 30, 2020

Mayor Elinor Carbone
Members of the City Council
Members of the Board of Finance
Members of the Board of Public Safety

RE: RFP #SCP-023-021920 Surveillance Camera System at Police Department

Six (6) responses were received for the Surveillance Camera System for the Torrington Police Department. Two (2) responses were disqualified for non-responsive bids.

Safer Places was hired to oversee this project with the supplying bid specifications, reviewing submitted proposals, making their recommendation and overseeing the project to completion.

Environmental Systems Corp. West Hartford, CT	Proposal A – TPD Headquarters - Proposal B – Traffic Barn -	$116,117.74 $ 88,435.70
Mammoth Security, Inc. **New Britain, CT**	**Proposal A – TPD Headquarters -** Proposal B – Traffic Barn -	**$ 94,544.38** $ 38,629.42
Soundworks & Security Torrington, CT	Proposal A – TPD Headquarters - Proposal B – Traffic Barn -	$131,770.30 $ 53,572.48
Security 101 Plainville, CT	Proposal A – TPD Headquarters - Proposal B – Traffic Barn -	$123,261.690 $ 52,468.86

After reviewing the submitted proposals, it is the recommendation of Steve Bukoski, Safer Places Consultant, Chief William Baldwin, Capt. Bart Barown and the Purchasing Agent that City Council authorize the Mayor to award the purchase of the Surveillance Camera System, only Project A, TPD Headquarters in the amount of $94,544.38 to Mammoth Security, Inc., New Britain, CT and to have the Mayor act on the behalf of the City regarding the execution of the contract and it administration pending approval from Board of Public Safety and Board of Finance.

Funding of this project will be through the Police Capital.

Thank you for your consideration in this matter.

Pennie Zucco
Pennie Zucco
Purchasing Agent

cc: W. Baldwin; B. Barown

SAFERPLACES INC
screening, testing & consulting

25 Wareham Street; Suite 2-26
Middleboro, MA 02346
P: 508.947.0600
F: 508.947.0699
info@SaferPlacesInc.com

Pre-Employment Screening • Tenant Screening • Drug Testing • ATS • Security Consulting

www.SaferPlacesInc.com

April 4, 2020

Ms. Pennie Zucco
Purchasing Agent
City of Torrington
140 Main Street
Torrington, CT 06790

Dear Ms. Zucco,

Safer Places has reviewed the video surveillance system bids submitted by ESC, Mammoth Security, Security 101 and Soundworks and Security in response to the City of Torrington's RFP# VSP-023-021920. Upon review and bidder responses to questions asked by Safer Places, we recommend Mammoth Security for this project. Chris Chagnon from Mammoth Security is very comfortable with the project scope, Safer Places' expectations and their quoted labor calculations. In addition, the manufacturer for the specified system had only positive comments regarding Mammoth Security and the reputation for knowledge and quality.

During our review and conversation with Chris Chagnon, a calculation error was discovered on Mammoth Security's bid form which omitted some labor from the total. Given Mammoth's aggressive pricing, Safer Places feels that Mammoth should be allowed to revise the bid to include the omitted labor amounts.

As part of Mammoth Security bid a $7200 warranty and maintenance contract was included. Safer Places feels that the Torrington Police Department, Mammoth Security and Safer Places should review what this contract encompasses and what the needs of the police department will be. It is our belief that given the system designed, products specified and manufacturer warranties included, the $7200 amount can be reduced greatly.

If you have any question, please feel free to contact me via my cell phone. Safer Places would also be happy to host a conference call to discuss this letter in greater detail if desired.

Sincerely

Stephen M. Bukoski

Stephen
Bukoski

(1)

City of Torrington

Bid Name: Surveillance Camera System at Police Dept Bid Number: SCP-023-021920

Date of Opening: February 19, 2020 Time of Opening: 11:00AM

VENDOR	BID BOND	NON-COLLUSION	BID AMOUNT	ADDENDUM
Environmental Systems Corp. 18 Jansen Court West Hartford, CT 06110	✓	✓	Prop #1 116117.74 Prop #2 88435.70	
Convergint Technologies 101 Hammer Mill, Suite A Rocky Hill, CT			Prop #1 82749.28 Prop #2 46392.88	
Mammoth Security Inc. 1 Hartford Square New Britain, CT 06052	✓	✓	Prop #1 91024.38 Prop #2 37349.42	
Soundworks + Security P.O. Box 23 Torrington, CT 06790	✓	✓	Prop #1 131770.30 Prop #2 53572.48	✓
Security 101 Advanced Security Integration 10 Pine St Plainville, CT 06062	✓	✓	Prop #1 123261.60 Prop #2 52468.86	✓
Valley Communications Systems 20 1st Avenue Chicopee, MA 01020-4619			Prop #1 } Prop #2 } 107779.51	

MANDATORY PROJECT BID FORM

SAFERPLACES screening, testing & consulting

PROJECT NAME: Torrington Police Department
ADDRESS: 576 Main Street
SYSTEMS: Proposal #1 - Video Surveillellence System Upgrade

BIDDER NAME: Mammoth Security Inc
CONTACT: Chris Chagnon
EMAIL: chris@mammothsecurity.com

Service Rate	Labor Rate	Tax Rate (Equip/Mat)	Tax Rate (Labor)
	$80.00	0.00%	0.00%

Manufacturer	Model #	Description		Equip. Unit Price	Extended Price	Labor Hours (each)	Total Labor	Total Labor Cost	Tax (Equip/Materials)	Tax (Labor)
Avigilon	15C-H4A-3MH-180	15MP 3-Imager Fixed Dome	3	$1,800.00	$5,400.00	2	6	$480.00	$0.00	$0.00
Avigilon	IRPTZ-MNT-WALL1	Wall Mount Bracket	5	$95.00	$475.00		0	$0.00	$0.00	$0.00
Avigilon	H4AMH-AD-PEND1	Pendant Mount Adapter	5	$160.00	$800.00		0	$0.00	$0.00	$0.00
Avigilon	H4-BO-JBOX1	Bullet Camera Conduit Junction Box	1	$90.00	$90.00		0	$0.00	$0.00	$0.00
Avigilon	H4F-MT-POLE1	Pole Mount Adapter	1	$90.00	$90.00		0	$0.00	$0.00	$0.00
Avigilon	H4-MT-POLE1	Pole Mount Adapter	2	$90.00	$180.00		0	$0.00	$0.00	$0.00
Avigilon	H4-MT-CRNR1	Corner Mount Adapter	2	$90.00	$180.00		0	$0.00	$0.00	$0.00
Avigilon	H4AMH-DO-COVR1	Clear Dome Cover	6	$160.00	$960.00		0	$0.00	$0.00	$0.00
Avigilon	H4AMH-AD-DOME1	Ceiling Mount Dome Kit	1	$160.00	$160.00		0	$0.00	$0.00	$0.00
Avigilon	15C-H4A-3MH-270	15MP 3-Imager Fixed Dome	2	$1,800.00	$3,600.00	2	4	$320.00	$0.00	$0.00
Avigilon	6.0L-H4F-D01-IR	6MP Fisheye Network Dome	1	$655.00	$655.00		0	$0.00	$0.00	$0.00
Avigilon	H4F-MT-NPTA1	Pendant Mount Adapter	1	$60.00	$60.00		0	$0.00	$0.00	$0.00
Avigilon	8.0C-H5A-B01-IR	8MP Network Bullet Camera with IR	1	$1,500.00	$1,500.00	1.5	1.5	$120.00	$0.00	$0.00
Avigilon	9C-H4A-3MH-270	9MP 3-Imager Fixed Dome w/IR	1	$1,655.00	$1,655.00	1.5	1.5	$120.00	$0.00	$0.00
Avigilon	H4AMH-AD-IR1	Multi-sensor IR Illminator Add-on	0		$0.00		0	$0.00	$0.00	$0.00
Avigilon	POE-INJ2-PLUS	PoE+ Power Injector	0		$0.00		0	$0.00	$0.00	$0.00
BCDVideo	BCD214-PLVS-210-88T-E	1U Video/Access Control Server, 88TB	1	$16,338.00	$16,338.00	4	4	$320.00	$0.00	$0.00
BCDVideo	BCD214-PLVS-210-80T-E	1U Video/Access Control Server, 80TB	0		$0.00		0	$0.00	$0.00	$0.00
BCDVideo	BCD-WA-DP-HDMI	HDMI Video Adapter	8	$32.00	$256.00	0.8	6.4	$512.00	$0.00	$0.00
BCDVideo	BCDT03-PWS-917X-GP20	Video Workstation (Enhanced CPU for All Views)	1	$4,182.00	$4,182.00	3	3	$240.00	$0.00	$0.00
BCDVideo	BCDSF01-ELWS-917-GP10	Video Workstation (Limited Views)	2	$3,103.00	$6,206.00	3	6	$480.00	$0.00	$0.00
Avigilon	ACC7-ENT	ACC 7 Enterprise Edition camera license	28	$290.00	$8,120.00		0	$0.00	$0.00	$0.00
Hanwha	SPE-1610	16-Port HD Analog Video Encoder	1	$891.00	$891.00	4	4	$320.00	$0.00	$0.00
Hanwha	HCV-7070R	HD Analog 4MP Fixed Dome	15	$195.80	$2,937.00	1	15	$1,200.00	$0.00	$0.00
Hanwha	SBV-158G	Surface Conduit Adapter	6	$55.83	$334.98		0	$0.00	$0.00	$0.00
Hanwha	PNM-7000VD	Dual Sensor 4MP Network Dome	1	$700.70	$700.70	2	2	$160.00	$0.00	$0.00
Hanwha	SLA-2M2800D	2.8mm Fixed Lens	2	$55.00	$110.00		0	$0.00	$0.00	$0.00
Hanwha	SBV-116B	Surface Conduit Adapter	13	$32.45	$421.85		0	$0.00	$0.00	$0.00
Hanwha	XNV-8080R	5MP VR Network Dome	6	$1,006.50	$6,039.00	0.75	4.5	$360.00	$0.00	$0.00
Hanwha	XND-8020R	5MP Indoor Network Dome	4	$516.99	$2,067.96	1	4	$320.00	$0.00	$0.00
Hanwha	PND-9080R	180 Degree Fixed Network Dome	1	$1,113.20	$1,113.20	2	2	$160.00	$0.00	$0.00
Monoprice	7305	BNC Patch Panel	1	$30.99	$30.99	2	2	$160.00	$0.00	$0.00
Monoprice	7253	24-Port CAT6 Patch Panel	1	$100.00	$100.00	2	2	$160.00	$0.00	$0.00
NVT	NV-EC-1D	1D-Port Ethernet-over-Coax Receiver	1	$869.00	$869.00	2	2	$160.00	$0.00	$0.00
NVT	NV-PS55-190W	55v Power Supply for EC10	1	$192.50	$192.50	1	1	$80.00	$0.00	$0.00
NVT	NV-PL-RMEC10	Rackmount Kit for NVT EC10	1	$176.00	$176.00		0	$0.00	$0.00	$0.00
NVT	NV-ECLK-PLS	Single Port PoE+ Ethernet-over-Coax Adapter	2	$179.85	$359.70	2	4	$320.00	$0.00	$0.00
NVT	NV-ECLK	Single Port PoE Ethernet-over-Coax Adapter	4	$124.30	$497.20	1	4	$320.00	$0.00	$0.00
Raytec	VAR2-IPPOE-IR-1	Long Range IR Illuminator	0		$0.00		0	$0.00	$0.00	$0.00
Raytec	VUB Pole	IR Pole Mount Adapter	0		$0.00		0	$0.00	$0.00	$0.00
Tripplite	B021-000-19HD	Rackmount KVM Unit	1	$969.09	$969.09	2	2	$160.00	$0.00	$0.00
Tripplite	SRW1U5	1U Wall Mount Cabinet	0		$0.00		0	$0.00	$0.00	$0.00
Tripplite	SRW12U33	12U Wall Mount Cabinet, 33" Deep	0		$0.00		0	$0.00	$0.00	$0.00
Tripplite	SMART3000RM2U	3000VA UPS, Rackmount	1	$1,204.50	$1,204.50	1	1	$80.00	$0.00	$0.00
Tripp-Lite	SMART1500LCD	1500VA UPS, Rackmount	1	$298.09	$298.09	1	1	$80.00	$0.00	$0.00
Ubiquiti	USW-PRO-24-POE	24-Port GB Network Switch, 2 SFP Ports	1	$719.40	$719.40	2	2	$160.00	$0.00	$0.00
Ubiquiti	US-16-150W	16-Port GB Network Switch	1	$308.00	$308.00	1	1	$80.00	$0.00	$0.00
Ubiquiti	USG	Network Firewall/Gateway	0		$0.00		0	$0.00	$0.00	$0.00
ViewZ	VZ-24CME	24" Flat-panel LED Monitor	5	$216.69	$1,083.45	0.75	3.75	$300.00	$0.00	$0.00
		Items Omitted or Required (for use by bidder)			$7,200.00		0	$0.00	$0.00	$0.00
		Maintenance 1 YR			$0.00		0	$0.00	$0.00	$0.00
					$0.00		0	$0.00	$0.00	$0.00
					$0.00		0	$0.00	$0.00	$0.00
					$0.00		0	$0.00	$0.00	$0.00
					$0.00		0	$0.00	$0.00	$0.00
					$0.00		0	$0.00	$0.00	$0.00
					$0.00		0	$0.00	$0.00	$0.00
					$0.00		0	$0.00	$0.00	$0.00
					$0.00		0	$0.00	$0.00	$0.00
N/A	N/A	Bucket Truck Rental			$0.00		0	$0.00	$0.00	$0.00
N/A	N/A	Scissor Lift Rental	1	$275.00	$275.00		0	$0.00	$0.00	$0.00
N/A	N/A	Project Management			$0.00		0	$0.00	$0.00	$0.00
N/A	N/A	Training	1		$0.00	24	24	$1,920.00	$0.00	$0.00
N/A	N/A	Programming & Testing			$0.00		0	$0.00	$0.00	$0.00
N/A	N/A	CAD Drawings & As-Builts			$0.00		0	$0.00	$0.00	$0.00
N/A	N/A	Cabling (materials & installation)	3.5	$184.79	$646.77	10	35	$2,800.00	$0.00	$0.00
N/A	N/A	Surface Conduit (materials & installation)			$0.00		0	$0.00	$0.00	$0.00
N/A	N/A	Misc. Hardware, Cable Hangers, Sleeves, etc.			$600.00		20	$1,600.00	$0.00	$0.00
					$81,052.38		168.65	$13,492.00	$0.00	$0.00

NOTES:

1.) Bidders are responsible for providing a fully functional system and shall notify Safer Places of any descrepencies or needed components prior to submitting pricing. Change orders will only be permitted for changes to the Scope of Work.

2.) Bidders shall confirm that all calculations on the above sheet are correct prior to subitting pricing. Safer Places or the customer will not be responsible for price adjustments after submitted. If an error is found with the formulas on the above sheet, it is the bidders responsible to notify Safer Places so it may corrected and redistributed to all bidders.

3.) All bidders will be notified of any changes made to the scope or corrections made to the bid documentation. This will ensure that everyone is bidding on the same information.

Total Equipment:	$81,052.38
Total Labor:	$13,492.00
Sub-total:	$94,544.38
System Discount:	
Taxes:	$0.00
Tax Adjustment from Discount:	$0.00
Shipping & Handling:	
Permits & Fees:	
BID TOTAL:	**$94,544.38**

CONFIDENTIAL INFORMATION - PROPERTY OF SAFER PLACES, LLC

MANDATORY PROJECT BID FORM

SAFERPLACES screening, testing & consulting

PROJECT NAME: Torrington Police Department
ADDRESS: 576 Main Street
SYSTEMS: Proposal #2 - Impound Lot

BIDDER NAME: Mammoth Security Inc.
CONTACT: Chris Chagnon
EMAIL: chris@mammothsecurity.com

Service Rate	Labor Rate	Tax Rate (Equip/Mat)	Tax Rate (Labor)
	$80.00	0.00%	0.00%

Manufacturer	Models	Description		Equip. Unit Price	Extended Price	Labor Hours (each)	Total Labor	Total Labor Cost	Tax (Equip/Material)	Tax (Labor)
Avigilon	15C-H4A-3MH-180	15MP 3-Imager Fixed Dome	0		$0.00		0	$0.00	$0.00	$0.00
Avigilon	IRPTZ-MNT-WALL1	Wall Mount Bracket	2	$95.00	$190.00		0	$0.00	$0.00	$0.00
Avigilon	H4AMH-AD-PEND1	Pendant Mount Adapter	2	$160.00	$320.00		0	$0.00	$0.00	$0.00
Avigilon	H4-BO-IBOX1	Bullet Camera Conduit Junction Box	2	$90.00	$180.00		0	$0.00	$0.00	$0.00
Avigilon	H4F-MT-POLE1	Pole Mount Adapter	2	$90.00	$180.00		0	$0.00	$0.00	$0.00
Avigilon	H4-MT-POLE1	Pole Mount Adapter	0		$0.00		0	$0.00	$0.00	$0.00
Avigilon	H4-MT-CRNR1	Corner Mount Adapter	2	$90.00	$180.00		0	$0.00	$0.00	$0.00
Avigilon	H4AMH-DO-CDVR1	Clear Dome Cover	2	$160.00	$320.00		0	$0.00	$0.00	$0.00
Avigilon	H4AMH-AD-DOME1	Ceiling Mount Dome Kit	0		$0.00		0	$0.00	$0.00	$0.00
Avigilon	15C-H4A-3MH-270	15MP 3-Imager Fixed Dome	2	$1,800.00	$3,600.00	2	4	$320.00	$0.00	$0.00
Avigilon	6.0L-H4F-D01-IR	6MP Fisheye Network Dome	0		$0.00		0	$0.00	$0.00	$0.00
Avigilon	H4F-MT-NPTA1	Pendant Mount Adapter	0		$0.00		0	$0.00	$0.00	$0.00
Avigilon	8.0C-H5A-B01-IR	8MP Network Bullet Camera with IR	2	$1,500.00	$3,000.00	1.5	3	$240.00	$0.00	$0.00
Avigilon	9C-H4A-3MH-270	9MP 3-Imager Fixed Dome w/IR	0		$0.00		0	$0.00	$0.00	$0.00
Avigilon	H4AMH-AD-IRL	Multi-sensor IR Illminator Add-on	2	$330.00	$660.00		0	$0.00	$0.00	$0.00
Avigilon	POE-INJ2-PLUS	PoE+ Power Injector	2	$75.00	$150.00		0	$0.00	$0.00	$0.00
BCDVideo	BCD214-PLVS-210-8BT-8	1U Video/Access Control Server, 8BTB	0		$0.00		0	$0.00	$0.00	$0.00
BCDVideo	BCD214-PLVS-210-8BT-8	1U Video/Access Control Server, 8DTB	1	$15,744.00	$15,744.00	4	4	$320.00	$0.00	$0.00
BCDVideo	BCD-WA-DP-HDMI	HDMI Video Adapter	0		$0.00		0	$0.00	$0.00	$0.00
BCDVideo	BCDT03-PWS-917K-QP20	Video Workstation (Enhanced CPU for All Views)	0		$0.00		0	$0.00	$0.00	$0.00
BCDVideo	BCD5F01-ELWS-917-QP10	Video Workstation (Limited Views)	0		$0.00		0	$0.00	$0.00	$0.00
Avigilon	ACC7-ENT	ACC 7 Enterprise Edition camera license	4	$290.00	$1,160.00		0	$0.00	$0.00	$0.00
Hanwha	SPE-1610	16-Port HD Analog Video Encoder	0		$0.00		0	$0.00	$0.00	$0.00
Hanwha	HCV-7070R	HD Analog 4MP Fixed Dome	0		$0.00		0	$0.00	$0.00	$0.00
Hanwha	SBV-158G	Surface Conduit Adaptor	0		$0.00		0	$0.00	$0.00	$0.00
Hanwha	PNM-7000VD	Dual Sensor 4MP Network Dome	0		$0.00		0	$0.00	$0.00	$0.00
Hanwha	SLA-2M2800D	2.8mm Fixed Lens	0		$0.00		0	$0.00	$0.00	$0.00
Hanwha	SBV-116B	Surface Conduit Adaptor	0		$0.00		0	$0.00	$0.00	$0.00
Hanwha	XNV-8080R	5MP VR Network Dome	0		$0.00		0	$0.00	$0.00	$0.00
Hanwha	XND-8020R	5MP Indoor Network Dome	0		$0.00		0	$0.00	$0.00	$0.00
Hanwha	PND-9080R	180 Degree Fixed Network Dome	0		$0.00		0	$0.00	$0.00	$0.00
Monoprice	7305	BNC Patch Panel	0		$0.00		0	$0.00	$0.00	$0.00
Monoprice	7253	24-Port CAT6 Patch Panel	1	$100.00	$100.00	0.5	0.5	$40.00	$0.00	$0.00
NVT	NV-EC-10	10-Port Ethernet-over-Coax Receiver	0		$0.00		0	$0.00	$0.00	$0.00
NVT	NV-PS55-190W	55v Power Supply for EC10	0		$0.00		0	$0.00	$0.00	$0.00
NVT	NV-PL-RMEC10	Rackmount Kit for NVT EC10	0		$0.00		0	$0.00	$0.00	$0.00
NVT	NV-ECLK-PLS	Single Port PoE+ Ethernet-over-Coax Adapter	0		$0.00		0	$0.00	$0.00	$0.00
NVT	NV-ECLK	Single Port PoE Ethernet-over-Coax Adapter	0		$0.00		0	$0.00	$0.00	$0.00
Raytec	VAR2-IPPOE-IB-1	Long Range IR Illuminator	1	$840.00	$840.00	0.5	0.5	$40.00	$0.00	$0.00
Raytec	VUB Pole	IR Pole Mount Adapter	1	$33.60	$33.60		0	$0.00	$0.00	$0.00
Tripplite	B021-000-19OHD	Rackmount KVM Unit	1	$969.09	$969.09	2	2	$160.00	$0.00	$0.00
Tripplite	SRW12US	12U Wall Mount Cabinet	0		$0.00		0	$0.00	$0.00	$0.00
Tripplite	SRW12US33	12U Wall Mount Cabinet, 33" Deep	1	$520.99	$520.99	2	2	$160.00	$0.00	$0.00
Tripplite	SMART3000RM2U	3000VA UPS, Rackmount	1	$1,204.50	$1,204.50	0.5	0.5	$40.00	$0.00	$0.00
Tripp-Lite	SMART1500LCD	1500VA UPS, Rackmount	0		$0.00		0	$0.00	$0.00	$0.00
Ubiquiti	USW-PRO-24-POE	24-Port GB Network Switch, 2 SFP Ports	0		$0.00		0	$0.00	$0.00	$0.00
Ubiquiti	US-16-150W	16-Port GB Network Switch	1	$308.00	$308.00	1	1	$80.00	$0.00	$0.00
Ubiquiti	USG	Network Firewall/Gateway	1	$141.00	$141.00	1	1	$80.00	$0.00	$0.00
ViewZ	VZ-24CME	24" Flat-panel LED Monitor	5	$216.69	$1,083.45	0.75	3.75	$300.00	$0.00	$0.00
		Items Omitted or Required (for use by bidder)			$0.00		0	$0.00	$0.00	$0.00
		State Fee			$0.00		0	$0.00	$0.00	$0.00
		Pole in concrete base	1	$500.00	$500.00	24	24	$1,920.00	$0.00	$0.00
							0	$0.00	$0.00	$0.00
					$0.00		0	$0.00	$0.00	$0.00
					$0.00		0	$0.00	$0.00	$0.00
					$0.00		0	$0.00	$0.00	$0.00
					$0.00		0	$0.00	$0.00	$0.00
					$0.00		0	$0.00	$0.00	$0.00
					$0.00		0	$0.00	$0.00	$0.00
N/A	N/A	Bucket Truck Rental			$0.00		0	$0.00	$0.00	$0.00
N/A	N/A	Ditch Witch	1	$250.00	$250.00	16	16	$1,280.00	$0.00	$0.00
N/A	N/A	Project Management			$0.00		0	$0.00	$0.00	$0.00
N/A	N/A	Training			$0.00		0	$0.00	$0.00	$0.00
N/A	N/A	Programming & Testing			$0.00		0	$0.00	$0.00	$0.00
N/A	N/A	CAD Drawings & As-Builts			$0.00		0	$0.00	$0.00	$0.00
N/A	N/A	Cabling (materials & installation)	1	$184.79	$184.79	10.5	10.5	$840.00	$0.00	$0.00
N/A	N/A	Surface Conduit (materials & installation)	1	$350.00	$350.00	8	8	$640.00	$0.00	$0.00
N/A	N/A	Misc. Hardware, Cable Hangers, Sleeves, etc.			$0.00		0	$0.00	$0.00	$0.00
					$32,169.42		80.75	$6,460.00	$0.00	$0.00

NOTES:

1.) Bidders are responsible for providing a fully functional system and shall notify Safer Places of any descrepencies or needed components prior to submitting pricing. Change orders will only be permitted for changes to the Scope of Work.

2.) Bidders shall confirm that all calculations on the above sheet are correct prior to subitting pricing. Safer Places or the customer will not be responsible for price adjustments after submitted. If an error is found with the formulas on the above sheet, it is the bidders responsible to notify Safer Places so it may corrected and redistributed to all bidders.

3.) All bidders will be notified of any changes made to the scope or corrections made to the bid documentation. This will ensure that everyone is bidding on the same information.

0

Total Equipment:	$32,169.42
Total Labor:	$6,460.00
Sub-total:	$38,629.42
System Discount:	
Taxes:	$0.00
Tax Adjustment from Discount:	$0.00
Shipping & Handling:	
Permits & Fees:	
BID TOTAL:	**$38,629.42**

CONFIDENTIAL INFORMATION - PROPERTY OF SAFER PLACES, LLC

CITY OF TORRINGTON
RFP SCP-023-021920
SURVEILLANCE CAMERA SYSTEM AT POLICE DEPARTMENT
Acceptance of Terms of this Agreement

Name of Proposer: Mammoth Security Inc.

Contact Person: Chris Chagnon

Address: 1 Hartford Square

City/State/Zip: New Britain CT 06052

Telephone: (860) 852-4540 ext. 255 Fax: _____

E-mail: chris@mammothsecurity.com

Authorized Signature [signature] Title: Estimator

Name Printed: Chris Chagnon Date: 2/18/2020

It is agreed by the above signed proposer that the signature and submission of this proposal. Represents the proposer's acceptance of all terms, conditions, and requirements of the proposal specifications, and, if awarded, the proposal will represent the agreement between the parties.

The proposer agrees that the cost of any work performed, materials furnished, services provided, or expenses incurred, which are not specifically delineated in the proposal documents, but which are incidental to the scope, intent, and completion of this contract, shall be deemed to have been included in the prices for the various items scheduled.

APPENDIX A
STATEMENT OF REFERENCES
RFP SCP-023-021920
SURVEILLANCE CAMERA SYSTEM AT POLICE DEPARTMENT

List five references which demonstrate your ability to supply equipment and services included in the scope of the specifications. Attach additional pages if required. The City reserves the right to contact each of the references listed for additional information regarding your company's qualifications. Email addresses must be included with the contact information.

Reference No. 1
Customer Name: Kaman Precision Products
Contact Individual: Paul Delucco Phone No: (860) 632-4561
Address: 217 Smith Street
Email address: paul.delucco@kaman.com Year: 2019
Description of system installed: Swapped and added cameras to existing exacq server.

Reference No. 2
Customer Name: Wethersfield Town Hall
Contact Individual: Tim O'Shea Phone No: 860-721-2855
Address: 505 Silas Dean Highway
Email address: tim.oshea@wethersfieldct.gov Year: 2019
Description of system installed: Added Hikvision to existing Hikvision system

Reference No. 3
Customer Name: Trinity Catholic High School
Contact Individual: The Diocese of Bridgeport Phone No: (203) 343-6163
Address 926 Newfield Ave.
Email address: rrapice@diobpt.org Year: 2019
Description of system installed: Full Hikvision camera system, Speakers, Voice + Data drops

Reference No. 4
Customer Name: _____
Contact Individual: _____ Phone No: _____
Address: _____
Email address: _____ Year: _____
Description of system installed: _____

Reference No. 5
Customer Name: _____
Contact Individual: _____ Phone No: _____
Address: _____
Email address: _____ Year: _____
Description of system installed: _____

Bid # RFP SCP - 023 - 021920

NON-COLLUSION AFFIDAVIT

STATE OF Connecticut COUNTY OF Hartford

I, Christopher Chagnon, being first duly sworn, deposes and says that:

1. I am Estimator of Mammoth Security Inc., the Bidder that has submitted the attached Bid for " Surveillance Camera System at Police department

2. I am fully informed respecting the preparation and contents of the attached Bid and of all pertinent circumstances respecting such bid;

3. Such Bid is genuine and is not a collusive or sham Bid;

4. Neither the said Bidder nor any of its officers, partners, owners, agents, representatives, employees or parties of interest, including this affiant, has in any way colluded, conspired, connived or agreed directly or indirectly with any other Bidder, firm or person to submit a collusive or sham Bid in connection with such Contract, for which the attached Bid has been submitted nor has it in any manner, directly or indirectly, sought by agreement or collusion or communication or conference with any other Bidder, firm or person to fix the price or prices in the attached Bid or of any other Bidder, or to fix any overhead, profit or cost element of the Bid price or the price of any Bidder, or to secure through any collusion, conspiracy, connivance or unlawful agreement any advantage against the City of Torrington or any person interested in the proposed Contract; and

5. The price or prices quoted in the attached Bid are fair and proper and are not tainted by any collusion, conspiracy, connivance or unlawful agreement on the part of the Bidder or any of it agents, representatives, owners, employees, or parties in interest, including this affiant.

(Printed) Chris Chagnon

(Signed) C. C

(Title) Estimator

Subscribed and sworn to before this 18th day of February, 20 20.

Rebecca Cales

Notary Public Printed

Rebecca Cales

Notary Public Signature

My Commission Expires REBECCA CALES NOTARY PUBLIC MY COMMISSION EXPIRES JUL. 31, 2024 (Notary Seal)

NOTE: Documents must be signed before and sealed by a Notary Public. Only documents bearing a notary seal will be accepted.

BCDVIDEO™

BCD214-PLVS

Data Sheet

Pro-Lite 2U 14-Bay Rackmount
Video Recording Server

Pro-Lite, High Performance and Video Processing

Enable scalable storage performance and video processing with the BCD214-PLVS server. This 2U, 2-socket platform brings you scalability and performance to adapt to a variety of video surveillance applications.

Up to 196TB of raw storage is provided by (14) 24/7 duty cycle SATA drives. Paired with the latest Intel® Xeon® Scalable processor, this provides high density storage with Pro-Lite throughput for the most demanding applications.

Ease of operation is provided with dual OS SSDs for accelerated boot and application load times. Remote management, provided by iDRAC, allows for constant system status and critical resource monitoring. RAID 5/6 storage options, in addition to redundant 750W power supplies, provide system high availability while a five-year, on-site, next business day, Keep Your Hard Drive warranty guarantees peace of mind.

KEY FEATURES

- Up to 196TB of Raw Storage
- Intel® Xeon® Silver 4210 Scalable Processor
- Operating System: Windows 10 Pro
- iDRAC features include:
  - Remote Management
  - Disaster Recovery
  - Critical Resource Monitoring

SSD & 24/7 Duty Cycle SATA Drives

Redundant Power

RAID Options 0, 1, 5, 6, 10

5-Year, On-site, NBD, Keep Your Hard Drive Warranty

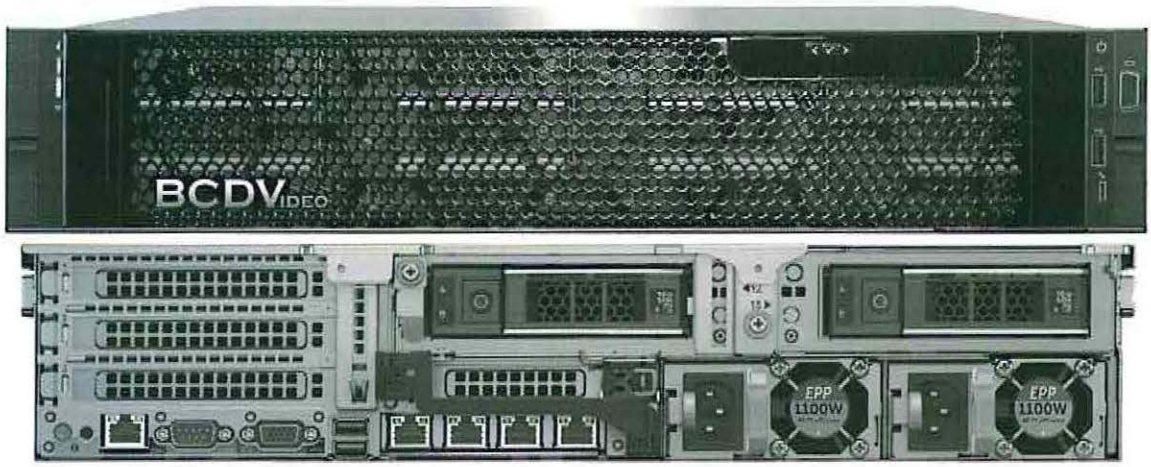

Back

FOR MORE INFORMATION: bcdvideo.com | sales@bcdvideo.com | +1.847.205.1922 **TECH SUPPORT:** support@bcdvideo.com | +1.844.462.2384

Copyright © 2019, BCDVideo. All rights reserved. This document is provided for information purposes only. The contents are subject to change without notice.

Intel, the Intel logo, the Intel Inside logo and Xeon are trademarks of Intel Corporation or its subsidiaries in the U.S. and/or other countries.

BCDVideo™

BCD214-PLVS

Data Sheet

Pro-Lite 2U 14-Bay Rackmount
Video Recording Server

CERTIFIED | PURPOSE BUILT | GUARANTEED

SYSTEM	
Processor(s)	Intel® Xeon® Silver 4210 Scalable Processor (10 Cores, 20 Threads, 3.20GHz)
Processor Passmark	Intel® Xeon® Silver 4210: 15,794
Maximum Storage	Up to 196TB
Operating System	Windows 10 Pro
Memory	Single Processor: 16GB (2x 8GB) Maximum Configuration: Up to 768GB RDIMM, 1.5TB LRDIMM (Up to 24x DDR4 DIMM Slots)
RAID	OS RAID 0, 1; Data RAID 0, 1, 5, 6, 10
RAID Controller	PERC H740P (8GB NV Cache, Supports RAID 0, 1, 5, 6, 10)
Networking	(4) 1GbE RJ45 Ports
Expansion Slots	(2) PCIe x16 Full-Height slots (in default configuration)
USB(s)	Rear (2) USB 3.0, Front (2) USB 2.0, Internal (1) USB 3.0
Video Outputs	(1) VGA
Remote Management	iDRAC Basic
Manufacturer	BCDVideo
Warranty	5-Year, On-site, NBD, Keep Your Hard Drive Warranty
MECHANICAL	
Form Factor	2U Rackmount
Rack Support	Sliding Rack Rail with Cable Management Arm
Hard Drive Bays	(14) 3.5" Hot Swappable Bays & (2) M.2 SSD Slots
Hard Drives Supported	PCIe NVMe & SATA
Power Supply(s)	(2) 1100W (100-240VAC) 80 Plus Platinum
Maximum Power Draw	788W
Operating Temperature	(Min) 50°F - (Max) 95° F [(Min) 10°C - (Max) 35° C]
Operating Humidity	5 ~ 90% (non-condensing)
Dimensions (WxDxH)	19" (482.6mm) x 28.15" (646mm) x 3.4" (86.8mm)
Max. Weight	73 lbs. (33.1kg)

FOR MORE INFORMATION: bcdvideo.com | sales@bcdvideo.com | +1.847.205.1922 **TECH SUPPORT:** support@bcdvideo.com | +1.844.462.2384

Copyright © 2019, BCDVideo. All rights reserved. This document is provided for information purposes only. The contents are subject to change without notice.

Intel, the Intel logo, the Intel Inside logo and Xeon are trademarks of Intel Corporation or its subsidiaries in the U.S. and/or other countries.

BCDVideo™

BCDT03-PWS

Data Sheet

Professional 3-Bay Tower Video Workstation

Professional, Compact, 3-Bay Workstation for Maximum Performance

Outperform a wide range of video computing tasks with the professional BCDT03-PWS. This tower workstation is compact enough to be deployed in a wide range of video surveillance applications while retaining the performance needed to excel in them. The latest Intel® 9th generation Core™ processor ensures high powered computing performance, and paired with the latest NVIDIA® GPU guarantees results.

Ensure your device has the resources for future tasks with a 460W power supply, giving this workstation the resources to power all onboard hardware smoothly and efficiently.

A boot optimized NVMe M.2 OS SSD ensure fast boot and application load times. BCDVideo's standard 5-year, on-site, next business day, Keep Your Hard Drive warranty allows for users to know that reliability and support is always with this workstation.

KEY FEATURES

- Intel® 9th Generation Core™ Processor
- Dedicated NVMe M.2 OS Solid State Drive
- Up to 64GB DDR4 RAM
- Operating System: Windows 10 Pro

Up to (1) Dual-Slot NVIDIA GPU

Up to 950W Power Supply

SSD & 24/7 Duty Cycle SATA Drives

5-Year, On-site, NBD, Keep Your Hard Drive Warranty

Back

FOR MORE INFORMATION: bcdvideo.com | sales@bcdvideo.com | +1.847.205.1922 **TECH SUPPORT:** support@bcdvideo.com | +1.844.462.2384

Copyright © 2019, BCDVideo. All rights reserved. This document is provided for information purposes only. The contents are subject to change without notice.

Intel, the Intel logo, the Intel Inside logo and Xeon are trademarks of Intel Corporation or its subsidiaries in the U.S. and/or other countries.

BCDVideo™

BCDT03-PWS

Data Sheet

Professional 3-Bay Tower Video Workstation

CERTIFIED | PURPOSE-BUILT | GUARANTEED

SYSTEM	
Processor(s)	(1) Intel® Core™ 9th Generation Processor (Up to 8 Cores, 8 Threads, 4.90GHz)
Processor Passmark	Intel® Core™ i5-9500: 11,560 Intel® Core™ i7-9700k: 17,205
Available GPUs	Intel® Integrated UHD630, NVIDIA® Quadro® P400, P620, P1000, P2000, P4000, RTX 4000 GeForce® GTX 1650, GTX 1660, RTX 2060 Super, RTX 2070 Super, RTX 2080 Super
Operating System	Windows 10 Pro
Memory	Single GPU Configuration: 16GB (2x 8GB) Dual GPU Configuration: 32GB (4x 8GB) Maximum Configuration: Up to 64GB RAM (4x DDR4 DIMM Slots)
Maximum Storage	Up to 42TB
Networking	(1) 1GbE RJ45 Ports
USB(s)	Rear (4) USB 3.0 Type-A, (2) USB 2.0, Front (1) USB 3.0 Type-A, (2) USB 2.0, (1) USB 3.0 Type-C
Expansion Slots	Varies with GPU, Up to (1) Full-height PCIe x16 slot, (2) Full-height PCI x4 slot, (1) Full-height PCI with Intel® Integrated UHD630
Manufacturer	BCDVideo
Warranty	5-Year, On-site, NBD, Keep Your Hard Drive Warranty
MECHANICAL	
Form Factor	Tower
Hard Drive Bays	(3) 3.5" Bays & (1) M.2 SSD Slot
Hard Drives Supported	PCIe NVMe, SATA
Power Supply(s)	Intel® Core™ i5-9500: (1) 460W (100-240VAC) 80 Plus Gold Intel® Core™ i7-9700k: (1) 850W (100-240VAC) 80 Plus Gold
Maximum Power Draw	435W
Operating Temperature	(Min) 32°F - (Max) 95° F [(Min) 0°C - (Max) 35° C]
Operating Humidity	10 ~ 80% (non-condensing)
Dimensions (WxDxH)	6.89" x 17.12" x 14.17" (175mm x 434.8mm x 359.9mm)
Max. Weight	20.06 lbs (9.1 kg)

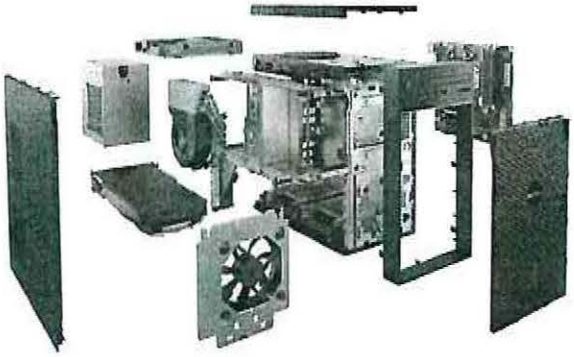

FOR MORE INFORMATION: bcdvideo.com | sales@bcdvideo.com | +1.847.205.1922 **TECH SUPPORT:** support@bcdvideo.com | +1.844.462.2384

Copyright © 2019, BCDVideo. All rights reserved. This document is provided for information purposes only. The contents are subject to change without notice.

Intel, the Intel logo, the Intel Inside logo and Xeon are trademarks of Intel Corporation or its subsidiaries in the U.S. and/or other countries.

BCDVIDEO™

BCDSF01-ELWS

Data Sheet

Entry Level Small Form Factor Video Workstation

Economical and Performance Driven Small Form Factor Video Workstation

The BCDSF01-ELWS small form factor can deliver the performance needed at an affordable price. Equipped with the latest Intel® 9th Generation Core™ i5 or i7 processor, which provides nearly 20% more computing potential than previous generations, this slim and efficient workstation can power through any task.

The BCDSF01-ELWS is enabled with fast GPU computing with a NVIDIA® Quadro® graphics card for high end video processing. Video and critical data can be stored with ease with up to 14TB of storage on an 24/7 duty cycle SATA hard drive and fast start up and application loading is enabled by a dedicated 256GB OS SSD.

KEY FEATURES

- Intel® 9th Generation Core™ Processor
- Dedicated NVMe M.2 OS Solid State Drive
- Up to 32GB DDR4 RAM
- Operating System: Windows 10 Pro

Up to (1) Half Height / Single Slot NVIDIA GPU

200W Power Supply

SSD & 24/7 Duty Cycle SATA Drives

5-Year, On-site, NBD, Keep Your Hard Drive Warranty

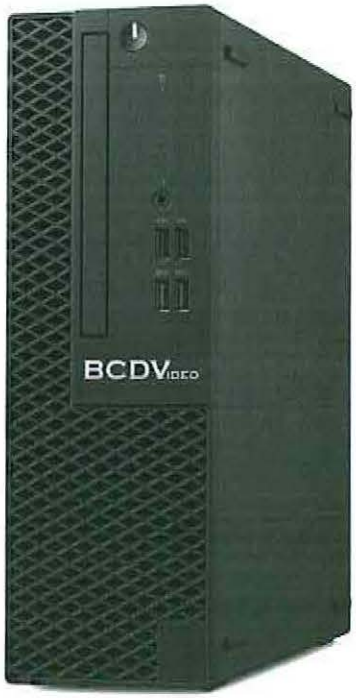

Back

FOR MORE INFORMATION: bcdvideo.com | sales@bcdvideo.com | +1.847.205.1922 **TECH SUPPORT:** support@bcdvideo.com | +1.844.462.2384

Copyright © 2019, BCDVideo. All rights reserved. This document is provided for information purposes only. The contents are subject to change without notice.

Intel, the Intel logo, the Intel Inside logo and Xeon are trademarks of Intel Corporation or its subsidiaries in the U.S. and/or other countries.*

BCDVideo™

BCDSF01-ELWS

Data Sheet

Entry Level Small Form Factor Video Workstation

CERTIFIED | PURPOSE BUILT | GUARANTEED

SYSTEM	
Processor(s)	(1) Intel® Core™ 9th Generation Processor (Up to 8 Cores, 8 Threads, 4.70GHz)
Processor Passmark	Intel® Core™ i5-9500: 11,560 Intel® Core™ i7-9700: 15,636
Operating Systems Supported	Windows 10 Pro
Available GPUs	Intel® Integrated UHD630, NVIDIA® Quadro® P620, P1000
Memory	Standard Configuration: 16GB (1x 16GB) Maximum Configuration: Up to 32GB RAM (2x DDR4 DIMM Slots)
Maximum Storage	Up to 14TB
Networking	(1) 1GbE RJ45 Ports
USB(s)	Rear (2) USB 3.1 Gen 1, (2) USB 2.0; Front (2) USB 3.1 Gen 1; (2) USB 2.0
Expansion Slots	Varies with GPU, (1) Low-profile PCIe x16 slot, (1) Low-profile PCIe x1 slot with Intel® Integrated UHD630
Manufacturer	BCDVideo
Warranty	5-Year, On-site, NBD, Keep Your Hard Drive Warranty
MECHANICAL	
Form Factor	Small Form Factor Workstation
Hard Drive Bays	(1) 3.5" Bay & (1) M.2 SSD Slot
Hard Drives Supported	PCIe NVMe, SATA
Power Supply(s)	(1) 200W (100-240VAC) 80 Plus Bronze
Maximum Power Draw	200W
Operating Temperature	(Min) 41°F - (Max) 95° F [(Min) 5°C - (Max) 35° C]
Operating Humidity	20 ~ 80% (non-condensing)
Dimensions (WxDxH)	3.7" x 11.5" x 11.4" (97mm x 292mm x 290mm)
Max. Weight	11.42 lbs (5.14 kb)

FOR MORE INFORMATION: bcdvideo.com | sales@bcdvideo.com | +1.847.205.1922 **TECH SUPPORT:** support@bcdvideo.com | +1.844.462.2384

Copyright © 2019, BCDVideo. All rights reserved. This document is provided for information purposes only. The contents are subject to change without notice.

Intel, the Intel logo, the Intel Inside logo and Xeon are trademarks of Intel Corporation or its subsidiaries in the U.S. and or other countries.*

BCDVideo Technical Support

Integrators can feel confident knowing that they can turn to a live Video Surveillance Expert to help them with questions or troubleshoot a system via remote access.

Live Phone Support

+1-844-462-2384

Monday - Friday

7:30am to 7:00pm CST

After Hours, Holidays, Emergency and Weekends

Answering Service – 365 24/7

Submit Online

via Ticket System or send Email

bcdvideo.com/support-ticket-request

support@bcdvideo.com

365 24/7

Support Videos

How-to technical support videos available online

bcdvideo.com/support

On-site, Next Business Day

Provided by technology partners

Dell's Next Business Day On-Site Service (NBD)* can place a Dell-certified engineer at the customer's location the following business day, after completion of telephone-based troubleshooting when a Dell technician accepts and logs a system fault call before 17:00 Monday-Friday**, subject to parts availability.

*Availability of service and response-time estimates may vary according to the remoteness or accessibility of product location. **Time may vary in some countries. At the time of printing, in UK and Ireland calls must be logged before 16:30 and in Denmark, Finland, Norway, and Sweden calls must be logged before 15:30 hrs local time to receive Next Business Day On-Site Service. For more information, please check with your local Dell office.

BCDVIDEO™

PURPOSE-BUILT, PERFORMANCE DRIVEN

BCDVideo™

5 YEAR WARRANTY FEATURES

Unmatched Data Protection and Tech Support

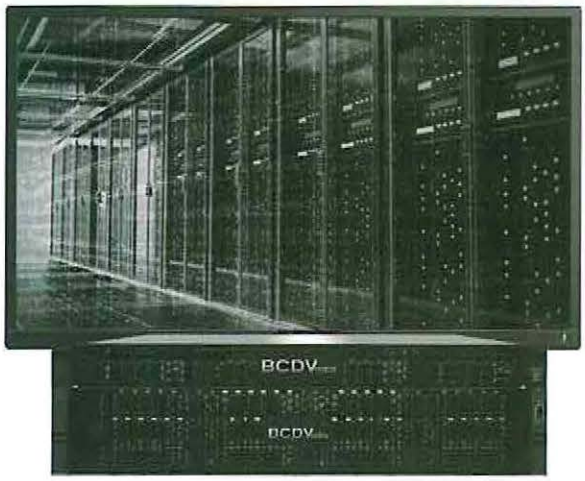

BCDVideo Offers Industry Leading Warranties, including a 5 Year Product, Global On-Site Next Business Day, Keep Your Hard Drive Warranty to provide the peace of mind needed, knowing that every piece of BCDVideo equipment will be properly serviced and taken care of. Features include 24/7, next business day, on-site support, as well as a Keep Your Hard Drive feature and lifetime technical support. (For long term projects, this warranty can be upgraded to a 7-year period for extended protection and service.) Most standard warranties don't allow for users to keep a failed drive, putting critical data at risk. The keep Your Hard Drive warranty feature provides an extra level of adata security with no added cost.

KEY BENEFITS

With 24/7 next business day support, both remote and on-site support by certified technicians will be available to service and support your BCDVideo product. In addition to a full hardware warranty, BCDVideo also offers a Keep Your Hard Drive feature to give customers of any size complete control over their data and hard drive. While still possible to return your drive, the Keep Your Hard Drive warranty waives the requirement to return failed drives.

Additional Features:

- **Greater Security** – Your sensitive data and hard drive never have to leave your control. Tracking failed hard drives in-transit becomes a non-issue. Covers multiple drives in a system and multiple failures.
- **Compliance Enablement** – Help comply with current data privacy regulations and internal company policies by ensuring sensitive information on your hard drives is not compromised.
- **Risk Mitigation** – Proper control/disposition of sensitive data can mitigate the risk of expensive civil liability by helping to prevent potential exposure of confidential customer data or intellectual property.

Products with a 5 year, Global On-Site, Next Business Day, Keep Your Hard Drive Warranty:

- **Apollo Server Series** – Enterprise grade IP Video Servers Purpose-built to guarantee the highest level performance. Video optimized features include 12G dual port SAS drives, dual SSD for operating system, mission-critical RAID5/6 disk protection, redundant power, and the latest Intel processors.
- **Neptune Server Series** - Professional grade IP Video Servers with enterprise features. Video surveillance grade hard drives enable high performance and reliability, combined with the latest Intel processors create highly effective, powerful, and affordable IP video solutions.
- **Gemini Workstations** – Enterprise grade video workstations Purpose-built to exceed industry standards. GPU accelerated hardware enbaled by cutting edge Nvidia GPUs, combined with the latest Intel processors and the latest hardware creates maximum performance.

For more information about BCDVideo's range of warranty features, reach out to your sales representative, or contact us at sales@bcdvideo.com

— POWERED BY —
DELLEMC

FOR MORE INFORMATION: bcdvideo.com | sales@bcdvideo.com | +1.847.205.1922 **TECH SUPPORT:** support@bcdvideo.com | +1.844.462.2384

Copyright © 2018, BCDVideo. All rights reserved. This document is provided for information purposes only. The contents are subject to change without notice.

avigilon™
a Motorola Solutions Company

H4 Multisensor Camera Line

The H4 Multisensor camera line combines Avigilon self-learning video analytics with exceptional coverage, featuring 3 or 4 individually configurable camera sensors that can be positioned to monitor virtually any area. With up to 32 MP effective resolution, the H4 Multisensor can provide the image quality needed to cover larger areas with excellent detail. Combining support for H.265 video compression along with Avigilon's HDSM SmartCodec™ technology, the H4 Multisensor camera has the ability to maintain high-image quality with less bandwidth and storage requirements.

With self-learning video analytics on board, the H4 Multisensor camera can detect and differentiate people and vehicles from regular motion, and notify operators of potentially critical events that may need further investigation. Featuring wide dynamic range, Avigilon LightCatcher™ technology and the option to add content adaptive IR to outdoor models, the H4 Multisensor camera can provide exceptional image quality in challenging lighting conditions.

	3-Sensor Model			4-Sensor Model		
Total Resolution	9 MP	15 MP	24 MP	12 MP	20 MP	32 MP
Max Coverage	180°–270°			360°		

KEY FEATURES AND BENEFITS

- Self-learning video analytics on all sensors
- Increased range of sensor positioning
- High efficiency video encoding using H.265
- Up to 32 MP total resolution
- Wide Dynamic Range and LightCatcher technology on all resolutions
- IP66 and IK10 rated on outdoor models
- Avigilon's HDSM SmartCodec technology
- Content Adaptive IR Technology up to 30m (98ft)
- Interchangeable Camera Mounts

Specifications

		3.0 MP	5.0 MP	4K (8.0 MP)
IMAGE PERFORMANCE	**Image Sensor**	1/2.8" progressive scan CMOS	1/2.8" progressive scan CMOS	1/2.5" progressive scan CMOS
	Active Pixels	2048 (H) × 1536 (V)	2592 × 1944	3840 × 2160
(per image sensor)	3 × image sensor, max resolution	6144 (H) × 1536 (V)	7776 × 1944	11520 × 2160
	4 × image sensor, max resolution	8192 (H) × 1536 (V)	10368 × 1944	15360 × 2160
	Aspect ratio	4:3	4:3	16:9
	IR Illumination - Optional (high power 850 nm LEDs)	30m (98 ft) maximum distance at 0 lux		
	Minimum Illumination	2.8mm: 0.025 lux (F1.2) in color mode 0.005 lux (F1.2) in mono mode 0 lux with optional IR illuminator 4mm: 0.05 lux (F1.6) in color mode 0.010 lux (F1.6) in mono mode 0 lux with optional IR illuminator		0.2 lux (F1.8) in color mode 0.04 lux (F1.8) in mono mode 0 lux with optional IR illuminator
	Dynamic Range	100 dB, true WDR, dual exposure		
	3D Noise Reduction Filter	Yes	Yes	Yes
	Image Rate–Analytics Enabled on All Sensors			
	3x Image Sensor (60 Hz/50 Hz)	24 / 25 fps	15 / 17 fps	12 / 13 fps
	4x Image Sensor (60 Hz/50 Hz)	20 / 20 fps	13 / 13 fps	8 / 8 fps
	Image Rate–High Framerate Mode			
	3x Image Sensor (60 Hz/50 Hz)	30 / 25 fps	20 / 20 fps	15 / 14 fps
	4x Image Sensor (60 Hz/50 Hz)	20 / 20 fps	15 / 14 fps	10 / 10 fps
LENS (per image sensor)	Lens and Horizontal Field of View	2.8mm f1.2 – 103° 4mm f1.6 – 72° Remote focus	2.8mm f1.2 – 103° 4mm f1.6 – 72° Remote focus	4mm f1.8 – 101° 5.2mm f1.8 – 70° Remote focus

IMAGE CONTROL	Image Compression Method	H.264 HDSM SmartCodec, H.265 HDSM SmartCodec, Motion JPEG
	Streaming	Multi-stream H.264, Multi-stream H.265, Motion JPEG
	Motion Detection	Selectable sensitivity and threshold
	Electronic Shutter Control	Automatic, Manual (1/8 to 1/8000 sec)
	Iris Control	Fixed
	Day/Night Control	Automatic, Manual
	Flicker Control	60 Hz, 50 Hz
	White Balance	Automatic, Manual
	Backlight Compensation	Adjustable
	Privacy Zones	Up to 64 zones
	Audio Compression Method	G.711 PCM 8 kHz
	Audio Input/Output	Line level input and output
	External I/O Terminals	Alarm In, Alarm Out

NETWORK	Network	Gigabit Ethernet, 1000BASE-TX
	Cabling Type	CAT5E
	Connector	RJ-45
	API	ONVIF® compliance Profile S and Profile T (www.onvif.org)
	Security	Password protection, HTTPS encryption, digest authentication, WS authentication, user access log, 802.1x port based authentication
	Protocol	IPv4, IPv6, HTTP, HTTPS, SOAP, DNS, NTP, RTSP, RTCP, RTP, TCP,UDP, IGMP, ICMP, DHCP, Zeroconf, ARP
	Streaming Protocols	RTP/UDP, RTP/UDP multicast, RTP/RTSP/TCP, RTP/RTSP/HTTP/TCP, RTP/RTSP/HTTPS/TCP, HTTP
	Device Management Protocols	SNMP v2c, SNMP v3

PERIPHERALS	USB Port	USB 2.0
	Onboard Storage	MicroSD/microSDHC/microSDXC slot – class 10/UHS-1 or better recommended

Specifications

		IN-CEILING MOUNT	SURFACE MOUNT	PENDANT MOUNT
MECHANICAL	**Dimension**	Ø299 mm × 163 mm (Ø11.77" × 6.42"), below mounting surface: Ø299 mm × 76 mm (Ø11.77" × 2.99")	Ø299 mm × 115 mm (11.77" × 4.53")	With wall arm: 385 mm × 262 mm × 299 mm (15.15" × 10.30" × 11.77") With NPT adapter: Ø299 mm × 248 mm (Ø11.77" × 9.76")
	Weight	5.2 kg (11.5 lbs)	With IR: 7 kg (15.4 lbs) Without IR: 5.8 kg (12.8 lbs)	With wall arm and IR: 8.4 kg (18.5 lbs) With wall arm only: 7.3 kg (16.1 lbs) With NPTA adapter and IR: 7.8 kg (17.2 lbs) With NPTA adapter only: 6.7 kg (14.8 lbs)
	Body	Aluminum, Plastic dome trim	Aluminum	Aluminum
	Finish	Plastic, cool grey	Powder coat, cool grey	Powder coat, cool grey
	Environmental	Not applicable	IK10 Impact Rating and IP66 Weather Rating	
	Optional IR Illuminator Ring	Not available	Optional accessory, 30m (98 ft) IR range	
PER SENSOR	Tilt	+7° to 96° from horizon		
	Pan	+/-120° (depending on position of image sensors)		
	Azimuth	+/-180°		
ELECTRICAL	Power Consumption	26 W with 24 VDC 37 VA with 24 VAC POE+	With IR: 52 W with 24 VDC 74 VA with 24 VAC POE++ or 60W POE* Without IR: 26 W with 24 VDC 37 VA with 24 VAC POE+	With IR: 52 W with 24 VDC 74 VA with 24 VAC POE++ or 60W POE* Without IR: 26 W with 24 VDC 37 VA with 24 VAC POE+
	External Power	24 VDC ± 10%; 24 VAC rms ± 10%, 50 or 60Hz		
	PoE*	25.5W PoE+, IEEE 802.3at Type 2 PoE Plus	With IR: High Power 51W PoE++* Without IR: 25.5W PoE+, IEEE 802.3at Type 2 PoE Plus	

* High power PoE may not be compatible with all switches or injectors. High power PoE is compatible with Cisco* UPoE, up to 60 W over 4 pairs, or with the high PoE products listed in the **Accessories** section. Contact Avigilon sales or Avigilon technical support for more information.

ENVIRONMENTAL	Operating Termperature Range	-10 °C (14 °F) to 50 °C (122 °F)	-40 °C (-40 °F) to 60 °C (140 °F)
	Storage Temperature	-10 °C to 70 °C (14 °F to 158 °F)	
	Humidity	0-95% non-condensing	
CERTIFICATIONS	Certifications	UL, cUL, CE, ROHS, WEEE, RCM, EAC, BIS	
	Safety	UL 62368-1, CSA 62368-1, IEC/EN 62368-1	
	Environmental	UL 2043 Plenum	UL/CSA/IEC 60950-22 IEC 60529 IP66 Rating, IK10 Impact Rating, IEC 60068-2-6 IEC 60068-2-27 Vibration and Shock
	Electromagnetic Emissions	FCC Part 15 Subpart B Class B, IC ICES-003 Class B, EN 55032 Class B, EN 61000-6-3, EN 61000-3-2, EN 61000-3-3, EN 50121-4 (when used with CM-AC-FERR1 on aux power)	
	Electromagnetic Immunity	EN 55024, EN 61000-6-1	
	Directives	RoHS, Reach (SVHC), WEEE	
SUPPORTED RULE BASED VIDEO ANALYTIC EVENTS (PER SENSOR)	Objects in Area	The event is triggered when the selected object type moves into the region of interest.	
	Object Loitering	The event is triggered when the selected object type stays within the region of interest for an extended amount of time.	
	Objects Crossing Beam	The event is triggered when the specified number of objects have crossed the directional beam that is configured over the camera's field of view. The beam can be unidirectional or bidirectional.	
	Object Appears or Enters Area	The event is triggered by each object that enters the region of interest. This event can be used to count objects.	
	Object Not Present in Area	The event is triggered when no objects are present in the region of interest.	
	Objects Enter Area	The event is triggered when the specified number of objects have entered the region of interest.	
	Objects Leave Area	The event is triggered when the specified number of objects have left the region of interest.	
	Object Stops in Area	The event is triggered when an object in a region of interest stops moving for the specified threshold time.	
	Direction Violated	The event is triggered when an object moves in the prohibited direction of travel.	
	Tamper Detection	The event is triggered when the scene unexpectedly changes.	

Outline Dimensions

Pendant Wall Mount

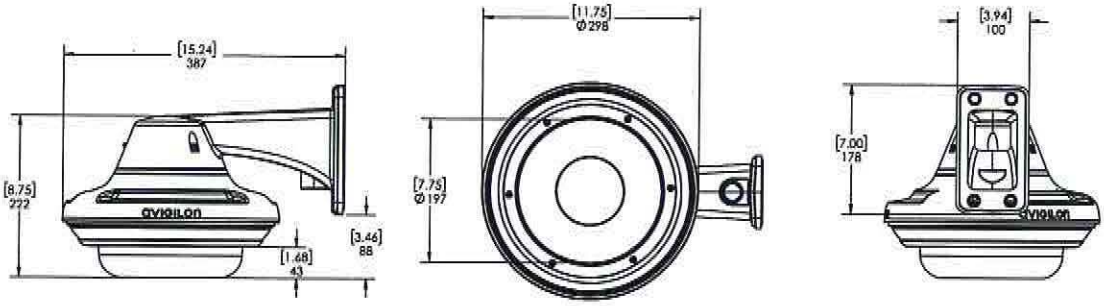

[X.X]	INCHES
X	MM

Pendant NPT Mount

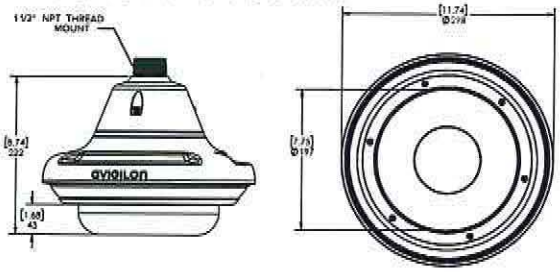

Surface Mount

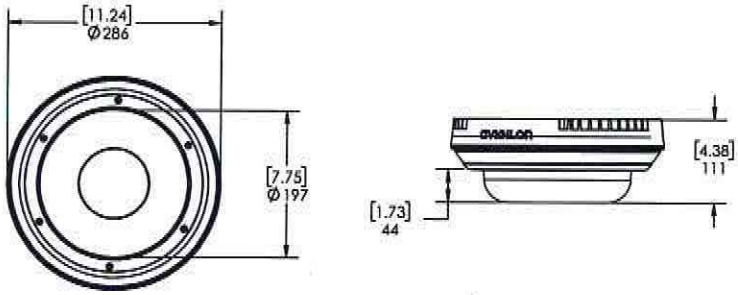

In-ceiling Mount

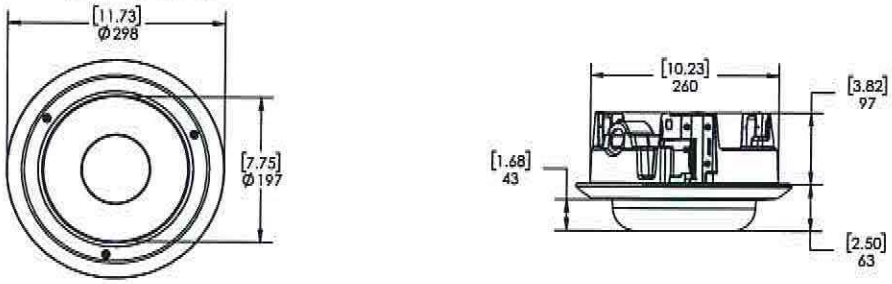

Metal Ceiling Panel

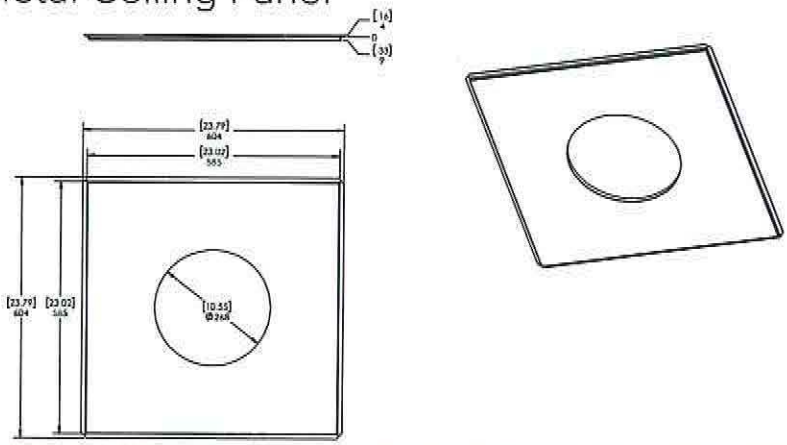

Ordering Information

The variety of mounting options for the H4 Multisensor provides maximum flexibility. All the available camera modules can be used in any of the mounting options.

MOUNTING SCENARIO	ORDERING INFORMATION

PENDANT WALL MOUNT

Order one of:
- Camera module
- H4AMH-AD-PEND1
- H4AMH-DO-COVR1 or H4AMH-DO-COVR1-SMOKE
- IRPTZ-MNT-WALL1
- Optional, H4AMH-AD-IRIL

PENDANT NPT MOUNT

Order one of:
- Camera module
- H4AMH-AD-PEND1
- H4AMH-DO-COVR1 or H4AMH-DO-COVR1-SMOKE
- IRPTZ-MNT-NPTA1
- Optional, H4AMH-AD-IRIL1

SURFACE MOUNT

Order one of:
- Camera module
- H4AMH-AD-DOME1
- H4AMH-DO-COVR1 or H4AMH-DO-COVR1-SMOKE
- Optional, H4AMH-AD-IRIL1

IN-CEILING MOUNT

Order one of:
- Camera module
- H4AMH-AD-CEIL1
- H4AMH-DC-COVR1 or H4AMH-DC-COVR1-SMOKE
- Optional, H4AMH-DC-CPNL1 if ceiling panel needed

Camera Modules

With the modular design of the H4 Multisensor, any camera module can be paired with any mounting adapter for maximum versatility and optimal installation. Each camera module must be ordered with a matching mounting adapter and dome cover.

DISPLAY PART NUMBER	DESCRIPTION
9C-H4A-3MH-270	3×3 MP, WDR, LightCatcher, 2.8mm, Camera Only
9C-H4A-3MH-180	3×3 MP, WDR, LightCatcher, 4mm, Camera Only
15C-H4A-3MH-270	3×5 MP, WDR, LightCatcher, 2.8mm, Camera Only
15C-H4A-3MH-180	3×5 MP, WDR, LightCatcher, 4mm, Camera Only
24C-H4A-3MH-270	3×4K (8 MP), WDR, LightCatcher, 4mm, Camera Only
24C-H4A-3MH-180	3×4K (8 MP), WDR, LightCatcher, 5.2mm, Camera Only
12C-H4A-4MH-360	4×3 MP, WDR, LightCatcher, 2.8mm, Camera Only
20C-H4A-4MH-360	4×5 MP, WDR, LightCatcher, 2.8mm, Camera Only
32C-H4A-4MH-360	4×4K (8 MP), WDR, LightCatcher, 4mm, Camera Only

Mounting Adapters and Dome Covers

The H4 Multisensor modular design provides pendant, surface, or in ceiling mounting adapters and a choice of two dome covers compatible with all the H4 Multisensor camera modules.

DISPLAY PART NUMBER	DESCRIPTION
H4AMH-AD-DOME1	Outdoor surface mount adapter, must order either a H4AMH-DO-COVR1 or H4AMH-DO-COVR1-SMOKE.
H4AMH-AD-PEND1	Outdoor pendant mount adapter, must order one of IRPTZ-MNT-WALL1 or IRPTZ-MNT-NPTA1 and one of H4AMH-DO-COVR1 or H4AMH-DO-COVR1-SMOKE.
IRPTZ-MNT-WALL1	Pendant wall arm adapter, for use with H4AMH-AD-PEND1 or H4 IRPTZ.
IRPTZ-MNT-NPTA1	Pendant NPT adapter for use with H4AMH-AD-PEND1 or H4 IRPTZ.
H4-MT-POLE1	Aluminum pole mounting bracket for H4 pendant style cameras or H4 HD bullet cameras.
H4-MT-CRNR1	Aluminum corner mounting bracket for H4 pendant style cameras or H4 HD bullet cameras.
H4AMH-AD-CEIL1	In-ceiling adapter, must order either a H4AMH-DC-COVR1 or H4AMH-DC-COVR1-SMOKE.
H4AMH-DO-COVR1	Dome bubble and cover, for outdoor surface mount or pendant mount, clear.
H4AMH-DO-COVR1-SMOKE	Dome bubble and cover, for outdoor surface mount or pendant mount, smoked. Not recommended for lowlight applications.
H4AMH-DC-COVR1	Dome bubble and cover, for in-ceiling mount, clear.
H4AMH-DC-COVR1-SMOKE	Dome bubble and cover, for in-ceiling mount, smoked. Not recommended for lowlight applications.
H4AMH-DC-CPNL1	Metal ceiling panel.

Optional IR Illuminator

The optional IR Illuminator is available for the H4 Multisensor when mounted in a pendant or surface mount adapter.

DISPLAY PART NUMBER	DESCRIPTION
H4AMH-AD-IRIL1	Optional IR illuminator ring, up to 30m (100ft), for use with H4AMH-DO-COVR1.

Optional Injectors and Switches

DISPLAY PART NUMBER	
ES-PS-S4	Managed switch, 5 port, Outdoor IP66, -40°C (-40°F) to 50°C (122°C), Gigabit Ethernet, AC power input. 1x SFP uplink and 4 port RJ45. Maximum PoE power allocation: Up to 4 ports of PoE+ each, or 2 ports of 60W PoE each. In 60W PoE mode, compatible with H4 PTZ, H4 IR PTZ and H4 Multisensor.
ES-PS-MNT-POLE1	Pole mount bracket for ES-PS-S4 switch.
POE-INJ2-60W-NA	Indoor single port Gigabit PoE++ 60W. North American power cord included. May also be used in European Union, Japan, Australia, New Zealand, Mexico, China, South Korea, Russia, Argentina, Saudi Arabia, Kuwait, UAE and Brazil. Temperature range of the PoE injector is -10 °C to +45 °C (14 °F to 113 °F). When used with the H4 IR PTZ, the camera will operate in a reduced temperature range from -10 °C to +50 °C (14 °F to 122 °F).
POE-INJ2-PLUS	Indoor single port POE+ injector. Injector operational temperature range -20°C to +40°C (-4°F to 104°F).

Miscellaneous Accessories

DISPLAY PART NUMBER	DESCRIPTION
CM-AC-FERR1	Ferrite clamp for use with aux power cable when meeting EN 50121-4 requirements. Pack of 5.

© 2020, Avigilon Corporation. All rights reserved. AVIGILON, the AVIGILON logo, HDSM SmartCodec, and LIGHTCATCHER are trademarks of Avigilon Corporation. Other names or logos mentioned may be the trademarks of their respective owners. ONVIF is a trademark of Onvif, Inc. The absence of the symbols ™ and ® in proximity to each trademark in this document or at all is not a disclaimer of ownership of the related trademark. Avigilon Corporation protects its innovations with patents issued in the United States of America and other jurisdictions worldwide (see www.avigilon.com/patents). Unless stated explicitly and in writing, no license is granted with respect to any copyright, industrial design, trademark, patent or other intellectual property rights of Avigilon Corporation or its licensors.

avigilon™
a Motorola Solutions Company

H4 Fisheye Camera Line

The Avigilon H4 Fisheye camera line is designed to provide a complete high resolution 360-degree panoramic view of a scene with no blind spots. The H4 Fisheye camera line is a cost-effective, easy-to-install solution designed to provide clear image detail and broad coverage with fewer cameras.

By providing quality imaging and situational awareness, the H4 Fisheye camera is an essential component of the complete Avigilon solution and a valuable addition to any existing surveillance solution.

The H4 Fisheye has a sleek, low-profile design making it suitable for installations where aesthetics are important and allowing it to fit in with architectural features without detracting from the surroundings. Its IK10-rated, vandal-proof and IP66 weather protected housing is ideal for indoor and outdoor environments such as retail stores, theatres, gas stations, manufacturing, healthcare, commercial and educational facilities.

Built on the H4 platform, the H4 Fisheye is available in 6 and 12 megapixel (MP) camera resolutions. It delivers exceptional image quality even in harsh environments and lighting conditions, and keeps bandwidth and storage to a minimum. Its content adaptive IR technology provides effective brightness while maintaining excellent scene illumination in dark environments. The H4 Fisheye also allows users to zoom in, focus and investigate a region of interest (ROI) in live or recorded video while preserving full situational awareness.

Harnessing the strength of Avigilon Control Center (ACC) software, High Definition Stream Management (HDSM) technology and idle scene mode technology, the H4 Fisheye camera intelligently and efficiently manages video data, lowering bandwidth and storage. The powerful client-side de-warping coupled with virtual PTZ technology allows easy navigation through live or recorded video, enabling security operators to view and track an object of interest from point A to B.

KEY FEATURES

6.0 and 12.0 megapixel resolution models

360 degree field of view fisheye lens

Patented High Definition Stream Management (HDSM) Technology

Content adaptive IR technology provides effective illumination through the field of view, while maintaining excellent scene illumination

Integrated IR (Infrared) LEDs provide uniform illumination in the dark, even at 0 lux, up to a maximum of 10 m (32.8 ft) away

Idle Scene Mode lowers bandwidth and storage usage if there are no motion events detected in the scene

IP66 certification offers total dust ingress protection and protection against high-pressure water jets

Avigilon LightCatcher™ technology provides exceptional image quality in low light environments

Vandal resistant with IK10 impact rating

ONVIF® Profile S and Profile T Compliant

ONVIF is a trademark of Onvif, Inc.

Specifications

		6.0 MP	12.0 MP
IMAGE PERFORMANCE	Image Sensor	1/1.8" progressive scan CMOS	1/2.3" progressive scan CMOS
	Active Pixels (H x V)	2000 x 2000	2992 x 2992
	Imaging Area (H x V)	4.8mm x 4.8mm (0.189" x 0.189")	4.6mm x 4.6mm (0.180" x 0.180")
	IR Illumination	up to 10 m (32.8 ft)	
	Minimum Illumination	0.13 lux (F2.2) in color mode; 0 lux (F2.2) in monochrome mode with IR	0.49 lux (F2.2) in color mode; 0 lux (F2.2) in monochrome mode with IR
	Image Rate H.264	30 fps	20 fps
	MJPEG	15 fps	10 fps
	Dynamic Range	93 dB	81 dB
	3D Noise Reduction Filter	Yes	Yes
LENS	Lens	1.45 mm, F/2.2	
	Horizontal Angle of View	180° hemisphere	
	Field of View	360°	
IMAGE CONTROL	Image Compression Method	H.264 (MPEG-4 Part 10/AVC), Motion JPEG	
	Streaming	Multi-stream H.264 and Motion JPEG	
	Bandwidth Management	HDSM™; Idle Scene Mode	
	Motion Detection	Pixel motion	
	Tamper Detection	Yes	
	Electronic Shutter Control	Automatic, Manual (1/7 to 1/8000 sec)	
	Iris Control	Fixed	
	Day/Night Control	Automatic, Manual	
	Flicker Control	50 Hz, 60 Hz	
	White Balance	Automatic, Manual	
	Backlight Compensation	Adjustable	
	Privacy Zones	Up to 64 zones	
NETWORK	Network	100BASE-TX	
	Cabling Type	CAT5	
	Connector	RJ-45	
	ONVIF	ONVIF Profile S and Profile T Compliant	
	Security	Password protection, HTTPS encryption, digest authentication, WS authentication, user access log, 802.1x port based authentication	
	Protocol	IPv6, IPv4, HTTP, HTTPS, SOAP, DNS, NTP, RTSP, RTCP, RTP, TCP,UDP, IGMP, ICMP, DHCP, Zeroconf, ARP	
	Streaming Protocols	RTP/UDP, RTP/UDP multicast, RTP/RTSP/TCP, RTP/RTSP/HTTP/TCP, RTP/RTSP/HTTPS/TCP, HTTP	
	Device Management Protocols	SNMP v2c, SNMP v3	
PERIPHERALS	Audio Input/Output	Line level I/O and internal microphone (can be enabled)	
	Audio Compression Method	G.711 8kHZ	
	External I/O Terminals	Alarm In, Alarm Out	
	Onboard Storage	microSDHC/microSDXC/UHS-1 – minimum class 10 or better recommended	
MECHANICAL	Dimensions (ØxH) Camera	160 mm x 51 mm; 6.2" x 2.0"	
	With bracket	162mm x 70mm; 6.38" x 2.75"	
	With NPT	160mm x 124mm; 6.31" x 4.89"	
	Weight Camera	0.826 kg; 1.77 lbs	
	With bracket	0.94 kg; 2.07 lbs	
	With NPT	1.138 kg; 2.5 lbs	
	Body	Aluminum	
	Housing	Vandal resistant. Surface mount; or pendant mount with NPT adapter.	
	Finish	Powder coat, RAL 9003	
ELECTRICAL	Power Consumption	25.5 W max	
	Power Source	VDC: 12 V +/-10%, 2.125 A min., L.P.S. per IEC 60950-1 PoE: IEEE 802.3af Class 3; PoE+: IEEE 802.3at Class 4	
	Power Connector	DC power input adapter	
	RTC Backup Battery	3V manganese lithium	
ENVIRONMENTAL	Operating Temperature	-40 °C to +55 °C (-40 °F to 131 °F) with 12 V DC or PoE+ power -20 °C to +55 °C (-4 °F to 131 °F) with PoE power	
	IR Illuminator Behavior	IR illuminator power is reduced to 8 m (26.2 ft) when PoE is used. IR illuminator will not turn on if temperature is 45 °C (113 °F) or higher.	
	Storage Temperature	-25°C to +50 °C (-13 °F to 122 °F)	
	Humidity	0 - 95% non-condensing	
CERTIFICATIONS	Certifications/Directives	UL cUL CE ROHS WEEE RCM EAC KC	
	Safety	UL 60950-1 CSA 60950-1 IEC/EN 60950-1 IEC 62471	
	Environmental	IK10 Impact Rating (camera housing only) UL/CSA/IEC 60950-22 IEC 60529 IP66 Rating	
	Electromagnetic Emissions	FCC Part 15 Subpart B Class B IC ICES-003 Class B EN 55032 EN 61000-6-3 EN 61000-3-2 EN 61000-3-3 KN 32	
	Electromagnetic Immunity	EN 55024 EN 61000-6-1 KN 35	

Outline Dimensions

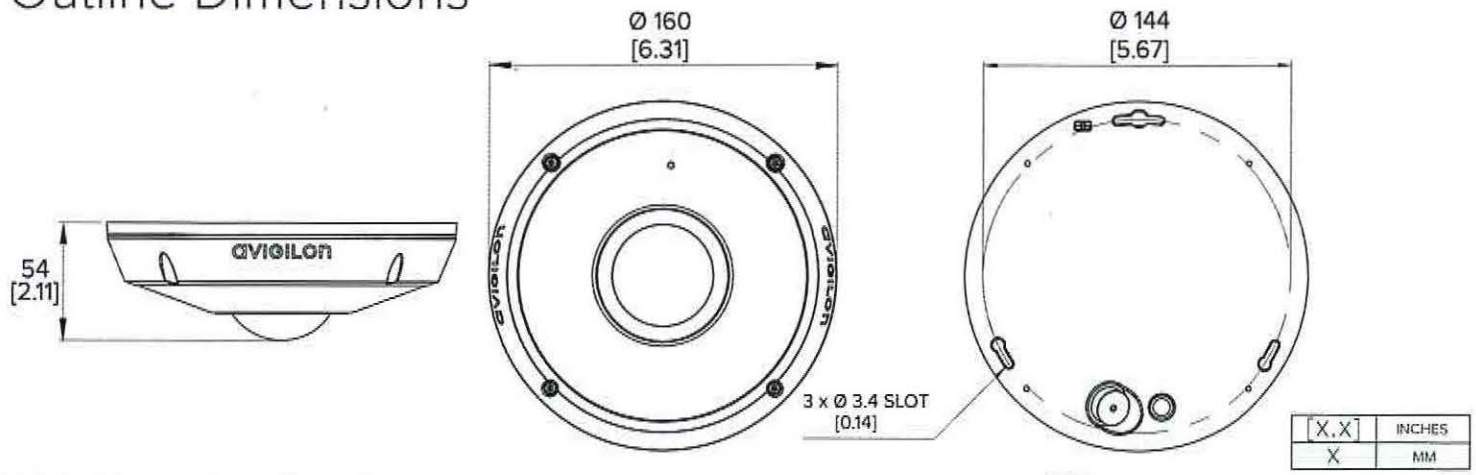

With Mounting Bracket

(INCLUDED IN THE H4F-DO-IR PACKAGE)

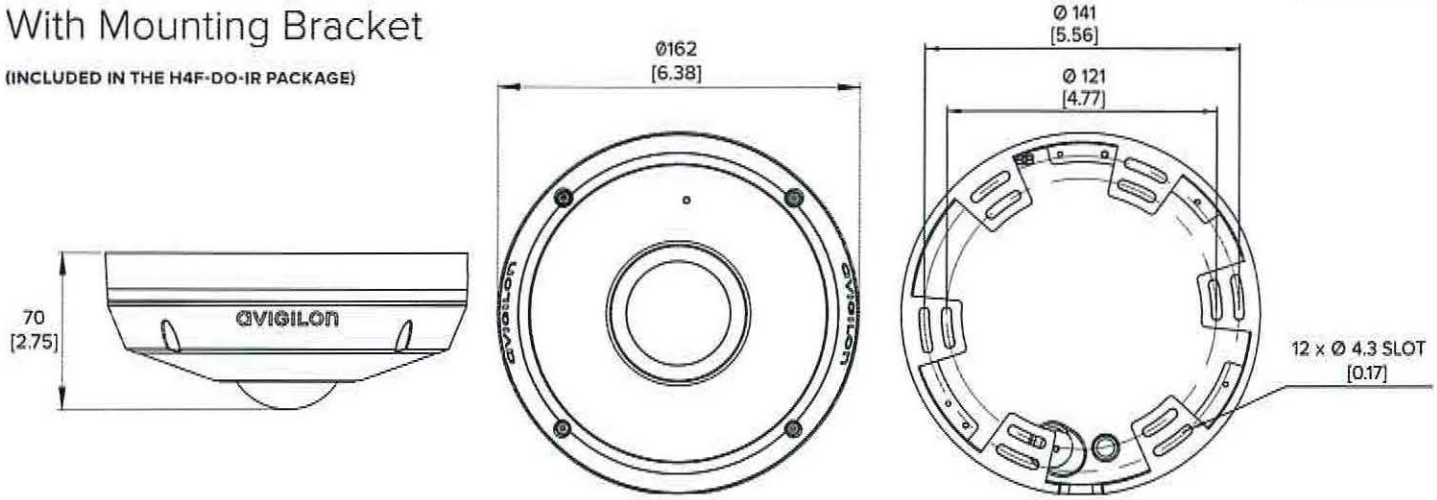

With NPT Adapter

(H4F-DO-IR + H4F-MT-NPTA1)

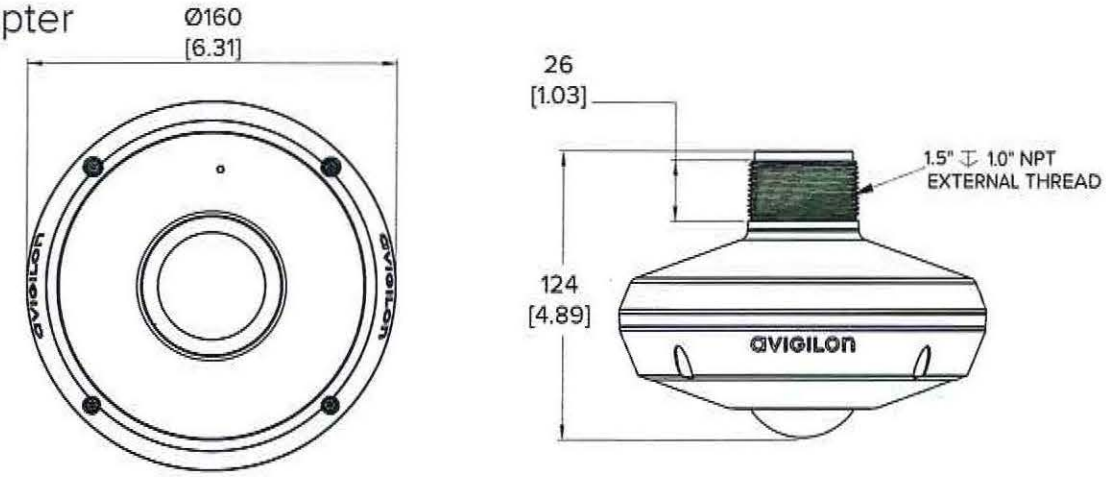

Ordering Information

	MP	LightCatcher Technology	Lens	IR	HDSM SmartCodec™
6.0L-H4F-DO1-IR	6.0	✓	Fisheye	✓	✓
12.0-H4F-DO1-IR	12.0		Fisheye	✓	✓

H4F-MT-NPTA1	NPT adapter for the Fisheye Dome Camera
CM-MT-WALL1	Pendant wall mount, compatible with H4F-MT-NPTA
H4-MT-CRNR1	Aluminum corner mounting bracket, compatible with CM-MT-WALL1

© 2016-2019, Avigilon Corporation. All rights reserved. AVIGILON, the AVIGILON logo, ACC, Avigilon Control Center, High Definition Stream Management, HDSM, HDSM SmartCodec, and LightCatcher are trademarks of Avigilon Corporation. ONVIF is a trademark of Onvif, Inc. Other product names mentioned herein may be the trademarks of their respective owners. The absence of the symbols ™ and ® in proximity to each trademark in this document is not a disclaimer of ownership of the related trademark. Avigilon Corporation protects its innovations with patents issued in the United States of America and other jurisdictions worldwide: www.avigilon.com/patents. Unless stated explicitly and in writing, no license is granted with respect to any copyright, industrial design, trademark, patent or other intellectual property rights of Avigilon Corporation or its licensors.

avigilon™
a Motorola Solutions Company

H5A Camera Line

2 MP | 4 MP | 5 MP | 6 MP | 8 MP

Features

NEXT-GENERATION VIDEO ANALYTICS
Expanded object classifications and more accurate detection in crowded scenes so you can detect and act faster.

MADE IN NORTH AMERICA AND 5 YEAR WARRANTY
Manufactured in North America* using globally-sourced materials and North American expertise, Avigilon stands behind the quality of its products. Backed by a 5 year warranty.

H.265 WITH HDSM SMARTCODEC™ TECHNOLOGY
Optimizes compression levels for regions in a scene to help maximize bandwidth savings, helping to keep internet connectivity costs down.

FOCUS OF ATTENTION WITH ACC™ 7
Leverages AI and video analytics technologies to determine what information is important and should be presented to security operators.

TRUE WIDE DYNAMIC RANGE
Available in all resolutions, capture details in scenes with both very bright and dark areas.

LIGHTCATCHER™ TECHNOLOGY
Offers exceptional detail in areas with low lighting.

ONVIF® COMPLIANT
Built on an open platform to allow integration with other security solutions.

MULTIPLE LENS OPTIONS
Choose from various lens types, including long zoom, for flexible coverage options.

ONVIF is a trademark of Onvif, Inc.

* With manufacturing facilities in both the United States and Canada, our "Made In North America" claim only applies to products from our

Specifications

			2.0 MP	4.0 MP	5.0 MP	6.0 MP	8.0 MP (4K ULTRA HD)
IMAGE PERFORMANCE	Image Sensor		1/2.8" progressive scan CMOS			1/1.8" progressive scan CMOS	
	Max Resolution (H x V) and Aspect Ratio		(16:9) 1920 x 1080	(16:9) 2560 x 1440 (4:3) 2304 x 1728	(4:3) 2592 x 1944 (16:9) 2560 x 1440	(16:9) 3200 x 1800 (3:2) 3072 x 2048	(16:9) 3840 x 2160
	Dynamic Range	WDR Off	83 dB	83 dB	83 dB	85 dB	85 dB
		WDR On	126 dB (dual exposure, 30 fps) 132 dB (triple exposure, 20 fps or less)	126 dB	126 dB	120 dB	120 dB
	Max Image Rate		(50 Hz/60 Hz): 25 fps/30 fps	WDR off (50 Hz/60 Hz): 25 fps/30 fps WDR on (50 Hz/60 Hz): 20 fps/20 fps		(50 Hz/60 Hz): 25 fps/30 fps	
	Bandwidth Management		HDSM SmartCodec technology; Idle scene mode				
	3D Noise Reduction Filter		Yes				

			3.3 – 9 mm	4.9 – 8 mm	9 – 22 mm	4.7 – 84.6 mm
LENS AND IR ILLUMINATION	IR Illumination Max Distance[1] (high power 850 nm LEDs)	Dome	35 m (115 ft), full tele 15 m (49 ft), full wide	30 m (98 ft), full tele 15 m (49 ft), full wide	N/A	N/A
		Bullet	50 m (164 ft), full tele 30 m (98 ft), full wide	50 m (164 ft), full tele 30 m (98 ft), full wide	90 m (295 ft), full tele 60 m (197 ft), full wide	N/A
	Minimum Illumination	**2 MP**	0.027 lux in color mode, 0.014 lux in monochrome mode, 0 lux with IR	N/A	0.052 lux in color mode, 0.026 lux in monochrome mode, 0 lux with IR	0.039 lux in color mode, 0.02 lux in monochrome mode
		4 MP	0.03 lux in color mode, 0.015 lux in monochrome mode, 0 lux with IR	N/A	0.058 lux in color mode, 0.029 lux in monochrome mode, 0 lux with IR	N/A
		5 MP	N/A	N/A	0.058 lux in color mode, 0.029 lux in monochrome mode, 0 lux with IR	N/A
		6 MP	N/A	0.055 lux in color mode, 0.028 lux in monochrome mode, 0 lux with IR	N/A	N/A
		8 MP	N/A	0.055 lux in color mode, 0.028 lux in monochrome mode, 0 lux with IR	N/A	N/A
	Horizontal Angle of View Based on Aspect Ratio	**2 MP**	(16:9) 34° – 99°	N/A	(16:9) 14° – 31°	(16:9) 4.1° – 60°
		4 MP	(16:9)(4:3) 34° – 92°	N/A	(16:9)(4:3) 14° – 31° (4:3) 11° – 24°	N/A
		5 MP	N/A	N/A	(16:9)(4:3) 14° – 31°	N/A
		6 MP	N/A	(16:9) 52° – 92° (3:2) 41° – 73°	N/A	N/A
		8 MP	N/A	(16:9) 52° – 92°	N/A	N/A
	Vertical Angle of View Based on Aspect Ratio	**2 MP**	(16:9) 18° – 53°	N/A	(16:9) 7.8° – 16.7°	(16:9) 2.3° – 34°
		4 MP	(16:9) 18° – 50° (4:3) 25° – 68°	N/A	(16:9) 8.2° – 17.4°	N/A
		5 MP	N/A	N/A	(16:9) 8.1° – 17.4° (4:3) 11° – 23°	N/A
		6 MP	N/A	(16:9) 29° – 51° (3:2) 27° – 48°	N/A	N/A
		8 MP	N/A	(16:9) 29° – 51°	N/A	N/A
	Max Aperture		F1.3	F1.8	F1.6	F1.6
	Control		P-Iris, Remote Focus and Zoom			

[1] IR illumination power may be reduced at higher operating temperatures.

IMAGE CONTROL	Image Compression Method	H.264 HDSM SmartCodec, H.265 HDSM SmartCodec, Motion JPEG
	Streaming	Multi-stream H.264, Multi-stream H.265, Motion JPEG; HDSM 2.0 on 4.0 MP, 5.0 MP, 6.0 MP, and 4K (8.0 MP) cameras
	Motion Detection	Pixel motion: Selectable sensitivity and threshold. Classified object detection
	Camera Tamper Detection	Yes
	Electronic Shutter Control	Automatic, Manual (1/7 to 1/8196 sec)
	Iris Control	Automatic, Open, Closed
	Day/Night Control	Automatic, Manual
	Flicker Control	60 Hz, 50 Hz
	White Balance	Automatic, Manual
	Backlight Compensation	Adjustable
	Privacy Zones	Up to 64 zones

NETWORK	Network	100BASE-TX, RJ45 Connector, CAT5e Cabling
	ONVIF	ONVIF compliance version 1.02, 2.00, Profile S, Profile T (www.onvif.org)
	Security	Password protection, HTTPS encryption, digest authentication, WS authentication, user access log, 802.1x port based authentication
	Protocols	IPv6, IPv4, HTTP, HTTPS, SOAP, DNS, NTP, RTSP, RTCP, RTP, TCP, UDP, IGMP, ICMP, DHCP, Zeroconf, ARP
	Streaming Protocols	RTP/UDP, RTP/UDP multicast, RTP/RTSP/TCP, RTP/RTSP/HTTP/TCP, RTP/RTSP/HTTPS/TCP, HTTP
	Device Management Protocols	SNMP v2c, SNMP v3

PERIPHERALS	USB Port		USB 2.0
	Onboard Storage	Dome	microSD/microSDHC/microSDXC slot – class 10/UHS-1 or better recommended
		Bullet and Box	SD/SDHC/SDXC slot – class 10/UHS-1 or better recommended

Specifications (Con't)

AUXILIARY I/O	Audio Compression Method	G.711 PCM 8 kHz		
	Audio Input/Output	Line level input and output		
	External I/O Terminals	Alarm In, Alarm Out		
	RS-485 Terminal	Yes, Box camera only		

		INDOOR SURFACE MOUNT	INDOOR IN-CEILING MOUNT	OUTDOOR SURFACE MOUNT
MECHANICAL (DOME)	Dimensions (LxWxH)	163 mm x 163 mm x 118 mm; 6.4" x 6.4" x 4.7"	181 mm x 181 mm x 164 mm; 7.1" x 7.1" x 6.5"	163 mm x 163 mm x 121 mm; 6.4" x 6.4" x 4.8"
	Weight	0.99 kg (2.18 lbs)	1.64 kg (3.62 lbs)	1.39 kg (3.06 lbs)
	Dome Bubble	Polycarbonate		
	Body	Plastic, Aluminum		Aluminum
	Housing	Surface mount, tamper resistant	Recessed mount, tamper resistant	Surface mount, vandal resistant
	Finish	Plastic, gray	Plastic, gray; Aluminum, powder coat, black	Powder coat, RAL 9003
	Adjustment Range	360° pan, ±180° azimuth, 9° – 95° tilt (30° – 95° with -IR option)		

		PENDANT CAMERA ONLY	WITH WALL MOUNT (H4A-MT-WALL1)	WITH NPT MOUNT (H4A-MT-NPTA1)
MECHANICAL (PENDANT DOME)	Dimensions (LxWxH)	172 mm x 172 mm x 124 mm; 6.8" x 6.8" x 4.9"	275 mm x 172 mm x 152.1 mm; 10.8" x 6.8" x 6.0"	172 mm x 172 mm x 172.3 mm; 6.8" x 6.8" x 6.8"
	Weight	1.59 kg (3.51 lbs)	3.04 kg (6.70 lbs)	1.84 kg (4.06 lbs)
	Dome Bubble	Polycarbonate		
	Body	Aluminum		
	Housing	Pendant mount, vandal resistant		
	Finish	Powder coat, RAL 9003		
	Adjustment Range	360° pan, ±180° azimuth, 9° – 95° tilt (30° – 95° with -IR option)		

MECHANICAL (BULLET)	Dimensions (LxWxH)		280 mm x 126 mm x 91 mm; 11.04" x 4.97" x 3.58" (including mounting bracket)
	Weight	Camera	1.71 kg (3.77 lbs)
		Mounting Bracket	0.21 kg (0.46 lbs)
	Body		Aluminum
	Housing		Surface mount, tamper resistant
	Finish		Powder coat, RAL 9003
	Adjustment Range		±175° pan, ±90° tilt, ±175° azimuth

MECHANICAL (BOX)	Dimensions (LxWxH)	168 mm x 76 mm x 67 mm; 6.6" x 3.0" x 2.6"
	Weight	0.62 kg (1.4 lbs)
	Body	Aluminum
	Camera Mount	1/4"-20 UNC (top and bottom)
	Finish	Powder coat, black

ELECTRICAL	Power Consumption	Bullet	13 W max		
		Dome	13 W max (11 W with no IR or IR disabled)		
		Box	7 W max		
	Power Source	Bullet	VDC: 12 V ± 10%, 13 W min	VAC: 24 V ± 10%, 15 VA min	PoE: IEEE802.3af Class 3 compliant
		Dome	VDC: 12 V ± 10%, 12 W min	VAC: 24 V ± 10%, 13 VA min	PoE: IEEE802.3af Class 3 compliant
		Box	VDC: 12 V ± 10%, 7 W min	VAC: 24 V ± 10%, 9 VA min	PoE: IEEE802.3af Class 3 compliant
	RTC Backup Battery		3V manganese lithium		

ENVIRONMENTAL	Operating Temperature	Bullet	-40 °C to +60 °C (-40 °F to 140 °F), in enclosed space -40 °C to +65 °C (-40 °F to 149 °F), with ambient convection
		Dome	-40 °C to +65 °C (-40 °F to 149 °F)
		Box	-10 °C to +60 °C (-14 °F to 140 °F)
	IR Illuminator Behavior	Bullet	IR illuminator will turn off if the temperature is 61 °C (141 °F) or higher. The illuminator will operate at 50% power if the temperature is between 55 °C (131 °F) and 61 °C (141 °F). Hysteresis: 5 °C (9 °F).
		Indoor Dome	IR illuminator will turn off if the temperature is 55 °C (131 °F) or higher. The illuminator will operate at 50% power if the temperature is between 44 °C (111 °F) and 55 °C (131 °F). Hysteresis: 2 °C (3.6 °F).
		Outdoor Dome	IR illuminator will turn off if the temperature is 57 °C (135 °F) or higher. The illuminator will operate at 50% power if the temperature is between 49 °C (120 °F) and 57 °C (135 °F). Hysteresis: 2 °C (3.6 °F).
	Storage Temperature		-10 °C to +70 °C (14 °F to 158 °F)
	Humidity		0 - 95% non-condensing

CERTIFICATIONS	Certifications/Directives		UL, cUL, CE, ROHS, Reach (SVHC), RCM, EAC, BIS
	Safety		UL 62368-1, CSA 62368-1, IEC/EN 62368-1, IEC 62471 (with -IR option)
	Environ-mental	Bullet	UL/CSA/IEC 60950-22, IEC 60529 IP66 and IP67 Weather Rating, IEC 62262 IK10 Impact Rating
		Outdoor Dome	UL/CSA/IEC 60950-22, IEC 60529 IP66 and IP67 Weather Rating, IEC 62262 IK10 Impact Rating
	Electromagnetic Emissions		FCC Part 15 Subpart B Class B, IC ICES-003 Class B, EN 55032 Class B, EN 61000-6-3, EN 61000-3-2, EN 61000-3-3
	Electromagnetic Immunity		EN 55024, EN 61000-6-1

Analytics Specifications

SUPPORTED ANALYTICS EVENTS	Objects in Area	The event is triggered when the selected object type moves into the region of interest.
	Object Loitering	The event is triggered when the selected object type moves into the region of interest and then stays for an extended amount of time.
	Objects Crossing Beam	The event is triggered when the specified number of objects have crossed the directional beam that is configured over the camera's field of view. The beam can be unidirectional or bidirectional.
	Object Appears or Enters Area	The event is triggered by each object that enters the region of interest. This event can be used to count objects.
	Object Not Present in Area	The event is triggered when no objects are present in the region of interest.
	Objects Enter Area	The event is triggered when the specified number of objects have entered the region of interest.
	Objects Leave Area	The event is triggered when the specified number of objects have left the region of interest.
	Object Stops in Area	The event is triggered when an object moves into a region of interest and then stops moving for the specified threshold time.
	Direction Violated	The event is triggered when an object moves in the prohibited direction of travel.
	Tamper Detection	The event is triggered when the scene unexpectedly changes.
SUPPORTED CLASSIFIED OBJECT TYPES	Object Types in Outdoor Mode	Vehicle, sub-types: Car, Truck, Bicycle, Motorcycle, Bus Person
	Object Types in Indoor Mode	Person
TEACH BY EXAMPLE	Teach By Example	Yes, when used with Avigilon Control Center™
AVIGILON CONTROL CENTER (ACC) VERSIONS SUPPORTED FEATURES	ACC Version 6.14.12 or higher	All supported analytic events with two types of classified objects: person or vehicle. Appearance search when paired with appropriate server hardware. H.265 supported.
	ACC Version 7.2 or higher	All supported analytic events with people and vehicles and all vehicle sub-types as classified objects. Appearance search when paired with appropriate server hardware. H.265 supported.

Outline Dimensions

Surface Mount Indoor Dome Camera

(H5A-D)

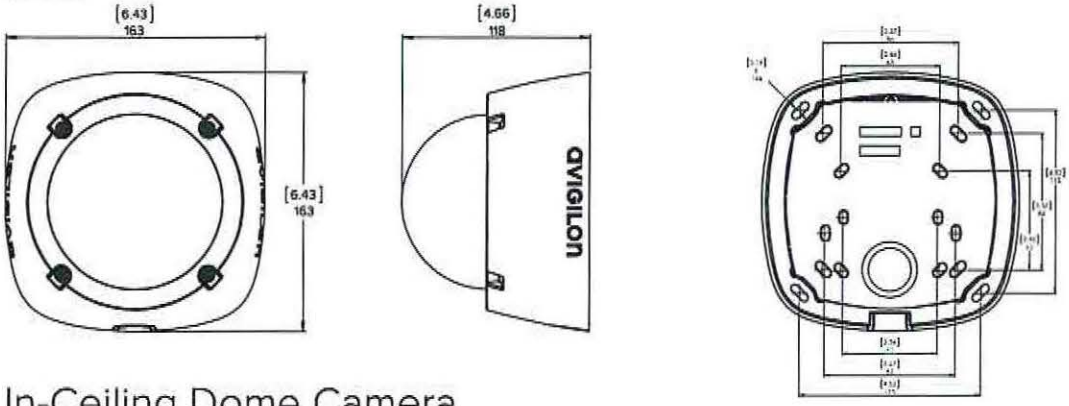

[X.X]	INCHES
X	MM

In-Ceiling Dome Camera

(H5A-DC)

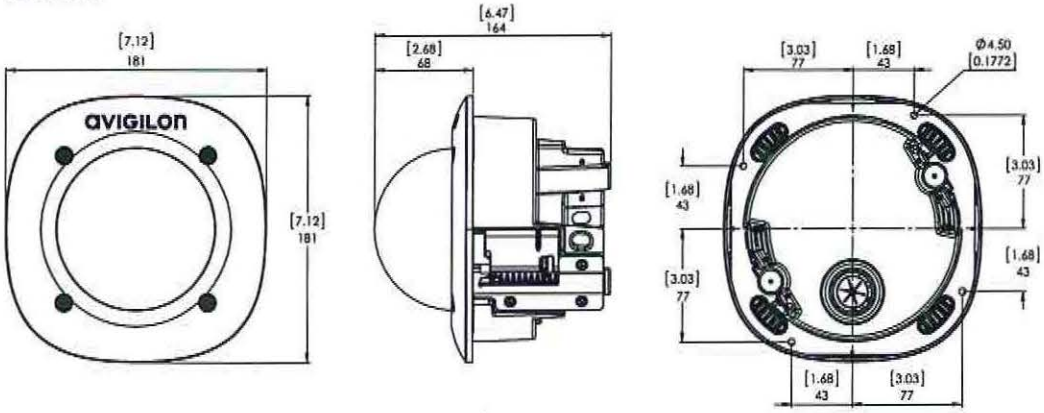

Outline Dimensions (Con't)

Surface Mount Outdoor Dome Camera

(H5A-DO)

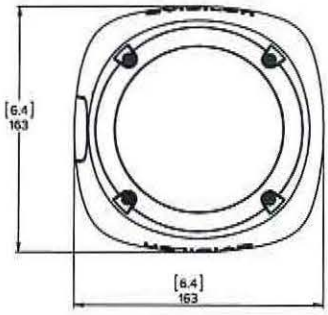

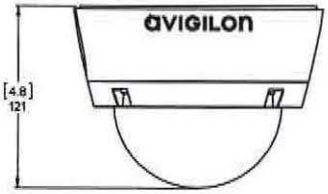

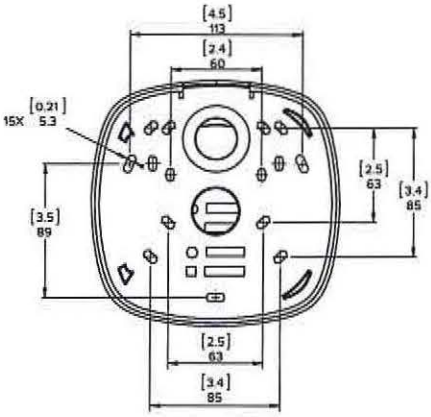

[X.X]	INCHES
X	MM

Pendant Dome Camera

(H5A-DP)

WITH NPT MOUNT (H4A-MT-NPTA1)

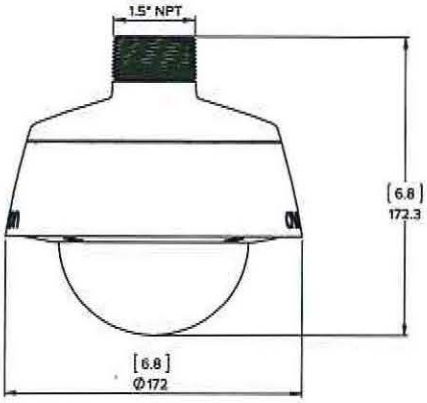

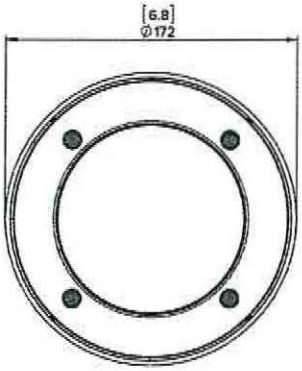

WITH WALL MOUNT (H4A-MT-WALL1)

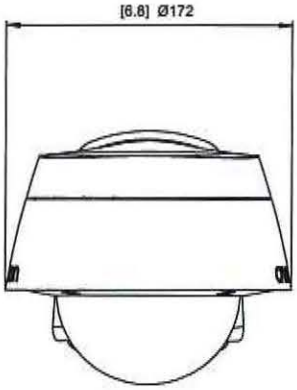

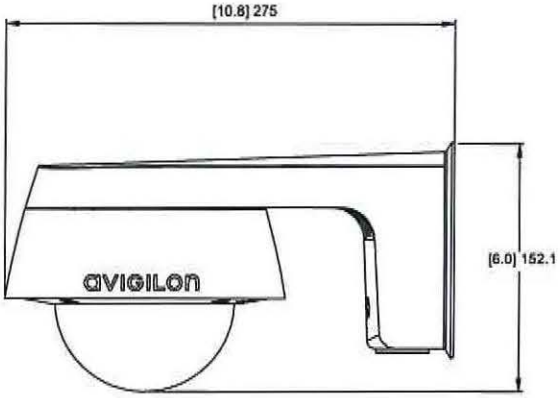

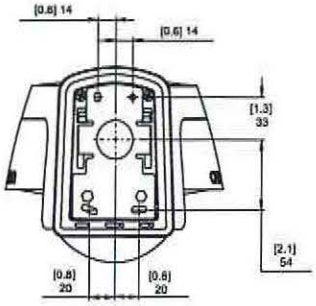

Box Camera

(H5A-B)

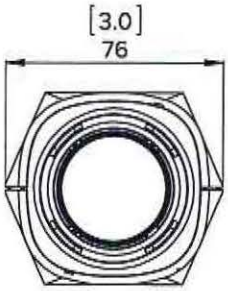

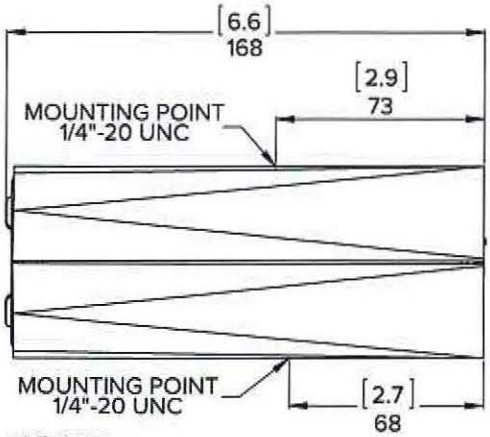

Outline Dimensions (Con't)

Bullet Camera

(H5A-BO-IR)

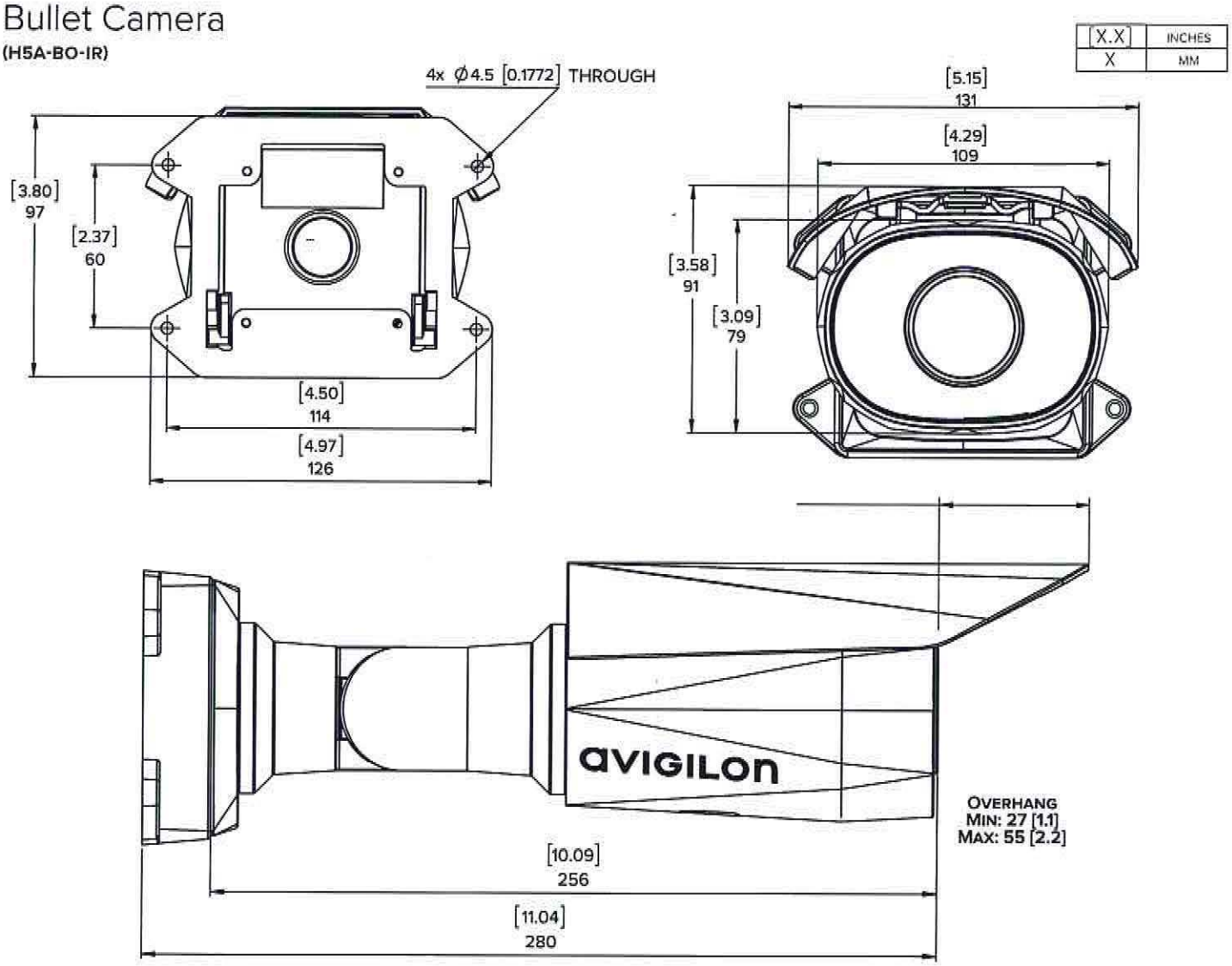

HD Bullet Camera Junction Box

(H4-BO-JBOX1)

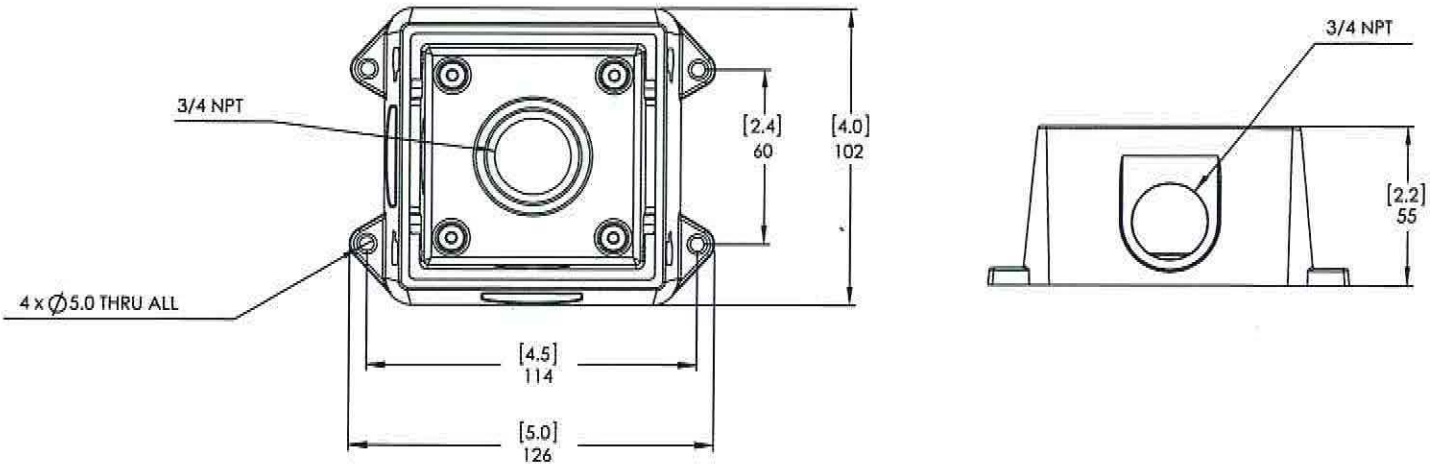

Ordering Information (Outdoor Dome and Bullet)

Surface Mount Outdoor Dome Camera

(H5A-DO)	MP	WDR	LightCatcher Technology	Lens	IR	Analytics	HDSM SmartCodec
2.0C-H5A-DO1	2.0	✓	✓	3.3 - 9 mm		✓	✓
2.0C-H5A-DO1-IR	2.0	✓	✓	3.3 - 9 mm	✓	✓	✓
2.0C-H5A-DO2	2.0	✓	✓	9 - 22 mm		✓	✓
4.0C-H5A-DO1	4.0	✓	✓	3.3 - 9 mm		✓	✓
4.0C-H5A-DO1-IR	4.0	✓	✓	3.3 - 9 mm	✓	✓	✓
4.0C-H5A-DO2	4.0	✓	✓	9 - 22 mm		✓	✓
5.0C-H5A-DO2	5.0	✓	✓	9 - 22 mm		✓	✓
6.0C-H5A-DO1	6.0	✓	✓	4.9 - 8 mm		✓	✓
6.0C-H5A-DO1-IR	6.0	✓	✓	4.9 - 8 mm	✓	✓	✓
8.0C-H5A-DO1	8.0	✓	✓	4.9 - 8 mm		✓	✓
8.0C-H5A-DO1-IR	8.0	✓	✓	4.9 - 8 mm	✓	✓	✓

H4A-DO-SMOK1	Outdoor dome camera cover with smoked bubble
H4A-DO-CLER1	Outdoor dome camera cover with clear bubble
H4A-AC-GROM1	Camera sealing grommet, pack of 10
CM-AC-GROM1	Pipe grommet, pack of 10
H4-AC-WIFI2-NA / H4-AC-WIFI2-EU	USB Wi-Fi adapter
CM-AC-AVIO1	3.5 mm jack with 1.8 m fly wire

Pendant Mount Outdoor Dome Camera

(H5A-DP)	MP	WDR	LightCatcher Technology	Lens	IR	Analytics	HDSM SmartCodec
2.0C-H5A-DP1	2.0	✓	✓	3.3 - 9 mm		✓	✓
2.0C-H5A-DP1-IR	2.0	✓	✓	3.3 - 9 mm	✓	✓	✓
2.0C-H5A-DP2	2.0	✓	✓	9 - 22 mm		✓	✓
4.0C-H5A-DP1	4.0	✓	✓	3.3 - 9 mm		✓	✓
4.0C-H5A-DP1-IR	4.0	✓	✓	3.3 - 9 mm	✓	✓	✓
4.0C-H5A-DP2	4.0	✓	✓	9 - 22 mm		✓	✓
5.0C-H5A-DP2	5.0	✓	✓	9 - 22 mm		✓	✓
6.0C-H5A-DP1	6.0	✓	✓	4.9 - 8 mm		✓	✓
6.0C-H5A-DP1-IR	6.0	✓	✓	4.9 - 8 mm	✓	✓	✓
8.0C-H5A-DP1	8.0	✓	✓	4.9 - 8 mm		✓	✓
8.0C-H5A-DP1-IR	8.0	✓	✓	4.9 - 8 mm	✓	✓	✓

H4A-DP-SMOK1	Pendant dome camera cover with smoked bubble
H4A-DP-CLER1	Pendant dome camera cover with clear bubble
H4A-MT-WALL1	Indoor/outdoor pendant wall arm mount
H4A-MT-NPTA1	Indoor/outdoor pendant NPT mount
H4-MT-POLE1	Aluminum pole mounting bracket for pendant dome cameras
H4-MT-CRNR1	Aluminum corner mounting bracket for pendant dome cameras
CM-AC-GROM1	Pipe grommet, pack of 10
H4-AC-WIFI2-NA / H4-AC-WIFI2-EU	USB Wi-Fi adapter
CM-AC-AVIO1	3.5 mm jack with 1.8 m fly wire

Outdoor Bullet Camera

(H5A-BO-IR)	MP	WDR	LightCatcher Technology	Lens	IR	Analytics	HDSM SmartCodec
2.0C-H5A-BO1-IR	2.0	✓	✓	3.3 - 9 mm	✓	✓	✓
2.0C-H5A-BO2-IR	2.0	✓	✓	9 - 22 mm	✓	✓	✓
4.0C-H5A-BO1-IR	4.0	✓	✓	3.3 - 9 mm	✓	✓	✓
4.0C-H5A-BO2-IR	4.0	✓	✓	9 - 22 mm	✓	✓	✓
5.0C-H5A-BO2-IR	5.0	✓	✓	9 - 22 mm	✓	✓	✓
6.0C-H5A-BO1-IR	6.0	✓	✓	4.9 - 8 mm	✓	✓	✓
8.0C-H5A-BO1-IR	8.0	✓	✓	4.9 - 8 mm	✓	✓	✓

H4-BO-JBOX1	Junction box for bullet cameras
H4-MT-POLE1	Aluminum pole mounting bracket for bullet cameras
H4-MT-CRNR1	Aluminum corner mounting bracket for bullet cameras
H4-AC-WIFI2-NA / H4-AC-WIFI2-EU	USB Wi-Fi adapter

Ordering Information (Indoor Box and Dome)

Box Camera

(H5A-B)	MP	WDR	LightCatcher Technology	Lens	IR	Analytics	HDSM SmartCodec
2.0C-H5A-B1	2.0	✓	✓	4.7 - 84.6 mm		✓	✓
2.0C-H5A-B2	2.0	✓	✓	3.3 - 9 mm		✓	✓
4.0C-H5A-B2	4.0	✓	✓	3.3 - 9 mm		✓	✓
4.0C-H5A-B3	4.0	✓	✓	9 - 22 mm		✓	✓
6.0C-H5A-B2	6.0	✓	✓	4.9 - 8 mm		✓	✓
8.0C-H5A-B2	8.0	✓	✓	4.9 - 8 mm		✓	✓

H4-AC-WIFI2-NA / H4-AC-WIFI2-EU	USB Wi-Fi adapter
CM-AC-AVIO1	3.5 mm jack with 1.8 m fly wire

Surface Mount Indoor Dome Camera

(H5A-D)	MP	WDR	LightCatcher Technology	Lens	IR	Analytics	HDSM SmartCodec
2.0C-H5A-D1	2.0	✓	✓	3.3 - 9 mm		✓	✓
2.0C-H5A-D1-IR	2.0	✓	✓	3.3 - 9 mm	✓	✓	✓
2.0C-H5A-D2	2.0	✓	✓	9 - 22 mm		✓	✓
4.0C-H5A-D1	4.0	✓	✓	3.3 - 9 mm		✓	✓
4.0C-H5A-D1-IR	4.0	✓	✓	3.3 - 9 mm	✓	✓	✓
4.0C-H5A-D2	4.0	✓	✓	9 - 22 mm		✓	✓
6.0C-H5A-D1	6.0	✓	✓	4.9 - 8 mm		✓	✓
6.0C-H5A-D1-IR	6.0	✓	✓	4.9 - 8 mm	✓	✓	✓
8.0C-H5A-D1	8.0	✓	✓	4.9 - 8 mm		✓	✓
8.0C-H5A-D1-IR	8.0	✓	✓	4.9 - 8 mm	✓	✓	✓

H4A-DD-SMOK1	Indoor dome camera cover with smoked bubble
H4A-DD-CLER1	Indoor dome camera cover with clear bubble
H4A-DD-SMOK1-BL	Black indoor dome camera cover with smoked bubble
H4A-DD-CLER1-BL	Black indoor dome camera cover with clear bubble
H4A-DD-SDWL1	Indoor dome camera sidewall knockout plug, pack of 5
H4A-DD-SDWL1-BL	Black indoor dome camera sidewall knockout plug, pack of 5
H4-AC-WIFI2-NA / H4-AC-WIFI2-EU	USB Wi-Fi adapter
CM-AC-AVIO1	3.5 mm jack with 1.8 m fly wire

In-Ceiling Mount Indoor Dome Camera

(H5A-DC)	MP	WDR	LightCatcher Technology	Lens	IR	Analytics	HDSM SmartCodec
2.0C-H5A-DC1	2.0	✓	✓	3.3 - 9 mm		✓	✓
2.0C-H5A-DC1-IR	2.0	✓	✓	3.3 - 9 mm	✓	✓	✓
2.0C-H5A-DC2	2.0	✓	✓	9 - 22 mm		✓	✓
4.0C-H5A-DC1	4.0	✓	✓	3.3 - 9 mm		✓	✓
4.0C-H5A-DC1-IR	4.0	✓	✓	3.3 - 9 mm	✓	✓	✓
4.0C-H5A-DC2	4.0	✓	✓	9 - 22 mm		✓	✓
6.0C-H5A-DC1	6.0	✓	✓	4.9 - 8 mm		✓	✓
6.0C-H5A-DC1-IR	6.0	✓	✓	4.9 - 8 mm	✓	✓	✓
8.0C-H5A-DC1	8.0	✓	✓	4.9 - 8 mm		✓	✓
8.0C-H5A-DC1-IR	8.0	✓	✓	4.9 - 8 mm	✓	✓	✓

H4A-DC-SMOK1	In-ceiling dome camera cover with smoked bubble
H4A-DC-CLER1	In-ceiling dome camera cover with clear bubble
H4A-DC-SMOK1-BL	Black in-ceiling dome camera cover with smoked bubble
H4A-DC-CLER1-BL	Black in-ceiling dome camera cover with clear bubble
H4-DC-CPNL1	Metal ceiling panel
H4A-AC-GROM1	Camera sealing grommet, pack of 10
H4-AC-WIFI2-NA / H4-AC-WIFI2-EU	USB Wi-Fi adapter
CM-AC-AVIO1	3.5 mm jack with 1.8 m fly wire

© 2019, Avigilon Corporation. All rights reserved. AVIGILON, the AVIGILON logo, AVIGILON CONTROL CENTER, ACC, HDSM SmartCodec and LIGHTCATCHER are trademarks of Avigilon Corporation. Other names mentioned herein may be the trademarks of their respective owners. Avigilon Corporation protects its innovations with patents issued in the United States of America and other jurisdictions worldwide: www.avigilon.com/patents. Unless stated explicitly and in writing, no license is granted with respect to any copyright, industrial design, trademark, patent or other intellectual property rights of Avigilon Corporation or its licensors.

WISENET

SPE-1610

16CH Network Video Encoder

Key Features

- Max. 4MP resolution
- Max. 15fps@4MP, 30fps@1080p
- H.264, MJPEG codec support
- Multiple streaming (up to 3 profiles per CH)
- 10/100/1000 Base-T

Dimensions

Unit : mm (inch)

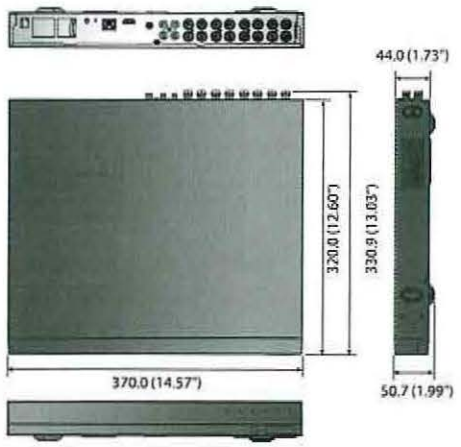

	SPE-1610N	SPE-1610P
VIDEO		
Input Channel	16CH BNC 1.0 Vpp / 75Ω composite NTSC/PAL	
Input Signal & Resolution	CVBS, AHD(2&4MP), CVI(2MP), TVI(2MP) Auto/Manual Detection	
Video Out	1 HDMI OUT (16 multi Image, 1920x1080)	
OPERATIONAL		
Motion Detection	Off / On	
Privacy Masking	Off / On (4ea rectangular zones)	
Alarm I/O	16 Input / 4 Output	
Alarm Trigger	Motion detection, Alarm input, Video loss, Tampering, Network disconnect	
Alarm Events	File Upload Via FTP, E-mail	
Remote Control Interface	1ea RS-485 (Half duplex)	
RS-485 Protocol	SAMSUNG-T, PELCO-P/D	
Coaxial Control	NTSC/PAL : Pelco-C (Coaxitron), AHD : ACP (AHD Coax protocol)	
NETWORK		
Ethernet	1 RJ-45 (10/100/1000 BASE-T)	
Video Compression Format	H.264 (MPEG-4 Part 10/AVC) : Main / Baseline / High, MJPEG	
Resolution	4M, 1920 x 1080, 1280 x 720, 928 x 480, 928 x 240, 704 x 480, 704 x 240, 352 x 240	4M, 1920 x 1080, 1280 x 720, 928 x 576, 928 x288, 704 x 576, 704 x 288, 352 x 288
Max. Framerate	- Main Stream 4MP : 15fps/CH, 1080p/720p/ WD1/4CIF/CIF : 30fps/CH - Sub Stream WD1/4CIF : 12fps/CH, 2CIF/CIF/ QVGA/QCIF : 30fps/CH - MJPEG : 2fps @1920 x 1080, 1280 x 720, 960H, D1	- Main Stream 4MP : 15fps/CH, 1080p/720p/ WD1/4CIF/CIF : 25fps/CH - Sub Stream WD1/4CIF : 12fps/CH, 2CIF/CIF/ QVGA/QCIF : 25fps/CH - MJPEG : 2fps @1920 x 1080, 1280 x 720, 960H, D1
Bitrate Control Method	H.264 : CBR or VBR, MJPEG : CBR	
Streaming Capability	Multiple streaming (Up to 3 Profiles per ch)	
Audio I/O	4 Line Input / 1 Line Output	
Audio Compression Format	G.711 u-law	
IP	IPv4, IPv6	
Protocol	TCP/IP, UDP/IP, RTP(UDP), RTP(TCP), RTCP, RTSP, NTP, HTTP, HTTPS, SSL/TLS, DHCP, PPPoE, FTP, SMTP, ICMP, IGMP, SNMPv1/v2c/v3(MIB-2), ARP, DNS, DDNS, QoS, UPnP, ONVIF, Bonjour	
Security	HTTPS (SSL) login authentication, Digest login authentication IP address filtering, User access log, 802.1X authentication (EAP-TLS, EAP-LEAP)	
Streaming Method	Unicast / Multicast	
Max. User Access	10 users at Unicast Mode	
Webpage Languages	English, French, German, Spanish, Italian, Russian, Turkish, Polish., Dutch, Swedish, Portuguese, Czech, Chinese, Japanese	
Web Viewer	Supported OS : Windows 7, 8, 10, Mac OS X 10.10, 10.11, 10.12 - Non-plugin WebViewer Supported Browser : Google Chrome 54, MS Edge 38, IE11, Mozilla Firefox 49 (Windows 64bit only), Apple Safari 9 (Mac OS X only)	
Application Programming Interface	ONVIF profile S, SUNAPI (HTTP API)	
Compatabile Software & Recoder	Smart viewer, SSM, Wisenet mobile viewer, Wisenet NVR, P / X / Q series	
ENVIRONMENTAL		
Operating Temperature / Humidity	-10°C ~ +50°C (+14°F ~ +122°F) / 20% ~ 80% RH	
ELECTRICAL		
Input Voltage / Current	12V DC	
Power Consumption	Max. 24W (12V, 2A)	
MECHANICAL		
Color / Material	Black / Metal	
Dimensions (WxHxD)	370.0 x 50.7 x 320.0mm (14.57" x 2.00" x 12.60")	
Weight	2.25kg (4.96 lb)	

* The alarm feature of SSM or NVR (connected to encoder) is in preparation
We will announce through our web site when it is avaialble. Please finde more information at hanwha -security.com
* Design and specifications are subject to change without notice.
* Wisenet is the proprietary brand of Hanwha Techwin, formerly known as Samsung Techwin.

 - 2018 Hanwha Techwin Co., Ltd All rights reserved

WISENET HD+

HCV-7070R

QHD (4MP) Analog Vandal-Resistant IR Dome Camera

Key Features

- QHD (2560 x 1440, 30fps) resolution
- 0.16 Lux@F1.6 (Color), 0 Lux (B/W : IR LED on)
- 3.2 ~ 10mm (3.1x) varifocal lens
- Day & Night (ICR), DWDR, Motion detection
- Transmission distance Max. 500m
- Easy installation (Plug & play), Dual power
- IP66, IK10 support

Dimensions

Unit : mm (inch)

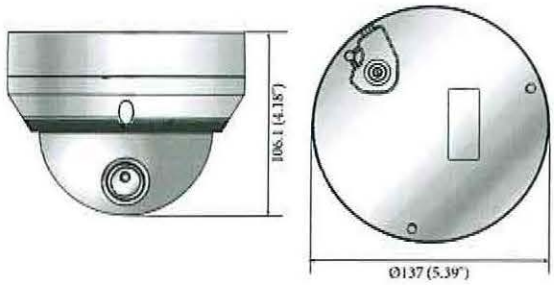

Accessories (Optional)

	HCV-7070RN/P	
VIDEO		
Imaging Device	1/3" 4M CMOS	
Total Pixels	2,720(H) x 1,536(V)	
Effective Pixels	2,688(H) x 1,520(V)	
Scanning System	Progressive Scan	
Min. Illumination	Color : 0.16 Lux (F1.6) B/W : 0 Lux (IR LED on)	
S / N Ratio	52dB (AGC off, Weight on)	
Video Output	BNC (AHD), Additional CVBS for installation (2Pin connector type)	
Resolution	2560 x 1440	
Max. Framerate	30fps @ 4M	25fps @ 4M
PAN / TILT / ROTATE		
Pan / Tilt / Rotate Range	0° ~ 350° / 0° ~ 67° / 0° ~ 355°	
LENS TYPE		
Focal Length (Zoom Ratio)	3.2 ~ 10mm (3.1x) varifocal	
Max. Aperture Ratio	F1.6	
Angular Field of View	H : 93.48°(Wide) ~ 29.44°(Tele) / V : 50.47°(Wide) ~ 16.64°(Tele) / D : 112.53°(Wide) ~ 33.7°(Tele)	
Min. Object Distance	0.5m (1.64ft)	
Focus Control	Manual	
Lens Type	DC Auto Iris	
Mount Type	Board-in Type	
OPERATIONAL		
On Screen Display	Multi-language Support (14) English, Spanish, French, Portuguese, German, Italian, Russian, Polish, Czech, Romanian, Serbian, Swedish, Danish, Turkish	
Day & Night	Auto (ICR) / Color / B/W	
Backlight Compensation	Off / User BLC / HLC	
Wide Dynamic Range	D-WDR (Off / On)	
Digital Noise Reduction	2D DNR	
Motion detection	Off / On (4 zones)	
Privacy Masking	Off / On (2 zones rectangle)	
Gain Control	Off / Low / Middle / High / Very High	
White Balance	ATW / Outdoor / Indoor / Manual / AWC (1,800K° ~ 10,500K°)	
Electronic Shutter Speed	1/30sec ~ 1/12,000sec	1/25sec ~ 1/12,000sec
Reverse	Off / H-Rev / V-Rev	
Alarm	(MD) output 1	
Remote Control Interface	Coaxial	
Protocol	AHD : ACP (AHD Coax Protocol), CVBS : Pelco-C (Coaxitron)	
IR Distance	30m (98.43ft)	
Video Transmission Distance	500m (3C2V Coaxial cable)	
ENVIRONMENTAL		
Operating Temperature / Humidity	-30°C ~ +55°C (-22°F ~ +131°F) / Less than 90% RH * Start up should be done at above -10°C (+14°F)	
Ingress Protection	IP66	
Vandal Resistance	IK10	
ELECTRICAL		
Input Voltage	Dual (24V AC ±10% & 12V DC ±10%)	
Power Consumption	Max. 5.8W	
MECHANICAL		
Color / Material	Ivory / Aluminum	
Dimensions (WxH)	Ø137 × 106.1mm (Ø5.39" × 4.18")	
Weight	715g (1.58 lb)	

* The lastest product information / specification can be found at hanwhasecurity.com
* Design and specifications are subject to change without notice.

 2017 Hanwha Techwin Co., Ltd. All rights reserved

Hanwha Techwin

PNM-7000VD

2M Multi-Directional Camera

Key Features

- 2ea x 1920 x 1080 resolution
- Max. 60fps@2M (H.265 / H.264)
- H.265, H.264, MJPEG codec supported
- Day & Night, WDR (150dB)
- Loitering, Directional detection, Fog detection, Motion detection, Tampering
- SD/SDHC/SDXC memory 2 slots (each camera), WiseStreamII Support

Dimensions

Unit : mm (inch)

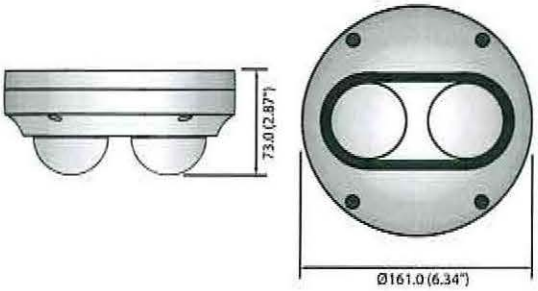

Lens (Optional)

SLA-2M2400D SLA-2M2800D SLA-2M3600D SLA-2M6000D

Accessories (Optional)

SBP-300HM6 SBV-158G

SBP-300LM SBP-300CM SBP-300WM SBP-300WM1 SBP-300PM SBP-300KM

	PNM-7000VD
VIDEO	
Video Out	CVBS : 1.0 Vpp / 75Ω composite, 720 x 480(N), 720 x 576(P), for installation
OPERATIONAL	
Camera Title	Off / On (Displayed up to 85 characters) - W/W : English / Numeric / Special characters - China : English / Numeric / Special / Chinese characters - Common : Multi-line (Max. 5), Color (Gray / Green / Red / Blue / Black / White), Transparency, Auto scale by resolution
Day & Night	Auto (Electrical) / Color / B/W / Schedule
Backlight Compensation	Off / BLC / HLC (Masking / Dimming), WDR
Wide Dynamic Range	150dB
Contrast Enhancement	SSDR (Off / On)
Digital Noise Reduction	SSNRV (2D + 3D noise filter) (Off / On)
Digital Image Stabilization	Off / On
Defog	Off / Auto / Manual
Motion Detection	Off / On (8ea, 8point polygonal zones)
Privacy Masking	Off / On (32ea, polygonal zones) - Color : Gray / Green / Red / Blue / Black / White - Mosaic
Gain Control	Off / Low / Middle / High
White Balance	ATW / AWC / Manual / Indoor / Outdoor (Included mercury & Sodium)
Contrast	Level adjustment
LDC (Lens Distortion Correction)	On / Off (5 Levels with min / max)
Electronic Shutter Speed	Minimum / Maximum / Anti flicker (2 ~ 1/12,000sec)
Digital Zoom	24x
Flip / Mirror	Off / On, Hallway view : 90°/270°
Video & Audio Analytics	Tampering, Loitering, Directional detection, Fog & Dust detection, Virtual line, Enter / Exit, (Dis)Appear, Face detection, Motion detection
Alarm Triggers	Motion detection, Video analytics, Network disconnect
Alarm Events	File upload via FTP, E-mail, Notification via E-Mail Local storage (SD / SDHC / SDXC) or NAS recording at event triggers
Pixel Counter	Support
NETWORK	
Ethernet	RJ-45 (10/100/1000BASE-T)
Video Compression Format	H.265/H.264 (MPEG-4 Part 10/AVC) : Main / Baseline / High, MJPEG
Resolution	1920 x 1080, 1280 x 1024, 1280 x 960, 1280 x 720, 1024 x 768, 800 x 600, 800 x 448, 720 x 576, 720 x 480, 640 x 480, 640 x 360, 320 x 240
Max. Framerate	H.265 / H.264 : 2M Max. 60fps at all resolutions, MJPEG : Max. 30fps
Smart Codec	Manual Mode (area-based : 5EA)
WiseStream II	Support
Video Quality Adjustment	H.265 / H.264, MJPEG : Target Bitrate Level Control
Bitrate Control Method	H.265 / H.264 : CBR or VBR, MJPEG : VBR
Streaming Capability	Multiple Streaming (Up to 10 Profiles)
IP	IPv4, IPv6
Protocol	TCP/IP, UDP/IP, RTP(UDP), RTP(TCP), RTCP,RTSP, NTP, HTTP, HTTPS, SSL/TLS, DHCP, FTP, SMTP, ICMP, IGMP, SNMPv1/v2c/v3(MIB-2), ARP, DNS, DDNS, QoS, UPnP, Bonjour
Security	HTTPS(SSL) login authentication, Digest login authentication, IP address filtering, User access log, 802.1X authentication (EAP-TLS, EAP-LEAP)
Streaming Method	Unicast / Multicast
Max. User Access	20 users at unicast mode
Edge Storage	SD/SDHC/SDXC 2slots (Each) - Motion Images recorded in the SD/SDHC/SDXC memory card can be downloaded. Local PC for instant recording
Application Programming Interface	ONVIF Profile S, SUNAPI (HTTP API)
Webpage Language	English, Korean, Chinese, French, Italian, Spanish, German, Japanese, Russian, Swedish, Portuguese, Czech, Polish, Turkish, Dutch, Hungarian, Greek
Web Viewer	Supported OS : Windows 7, 8.1, 10, Mac OS X 10.10, 10.11, 10.12 Non-plugin Webviewer Supported Browser : Google Chrome 63, MS Edge 41, Mozilla Firefox 57 (Windows 64bit only), Apple Safari 11 (Mac OS X only) Plug-in Webviewer Supported Browser : MS Explorer 11, Apple Safari 11 (Mac OS X only)
Central Management Software	SmartViewer, SSM
ENVIRONMENTAL	
Operating Temperature / Humidity	-40°C ~ +55°C (-40°F ~ +131°F) / Less than 90% RH
Storage Temperature / Humidity	-50°C ~ +60°C (-58°F ~ +140°F) / Less than 90% RH
Ingress Protection	IP66
Vandal Resistance	IK10
ELECTRICAL	
Input Voltage / Current	PoE (IEEE802.3af, Class3)
Power Consumption	Max. 12.95W (PoE)
MECHANICAL	
Color / Material	Ivory (NCS S 0502-Y) / Metal
Dimensions (WxH)	Ø161.0 x 73.0mm (6.34" x 2.87")
Weight	840g (1.85 lb)

* The lastest product information / specification can be found at hanwha-security.com
* Design and specifications are subject to change without notice.
* Wisenet is the proprietary brand of Hanwha Techwin.

 © 2018 Hanwha Techwin Co., Ltd. All rights reserved.

WISENET

SLA-2M2400D/2800D/3600D/6000D

2MP Optional Lenses for PNM-7000VD

SLA-2M2400D

SLA-2M2800D

SLA-2M3600D

SLA-2M6000D

Key Features

- 0.055Lux@F2.0 (Color, B/W)
- WDR (150dB)
- 2.4mm fixed lens (SLA-2M2400D)
- 2.8mm fixed lens (SLA-2M2800D)
- 3.6mm fixed lens (SLA-2M3600D)
- 6.0mm fixed lens (SLA-2M6000D)

	SLA-2M2400D	SLA-2M2800D	SLA-2M3600D	SLA-2M6000D
VIDEO				
Imaging Device	1/2.8" 2M CMOS	1/2.8" 2M CMOS	1/2.8" 2M CMOS	1/2.8" 2M CMOS
Total Pixels	1,945(H) x 1,109(V) 2.16M	1,945(H) x 1,109(V) 2.16M	1,945(H) x 1,109(V) 2.16M	1,945(H) x 1,109(V) 2.16M
Effective Pixels	1,945(H) x 1,097(V) 2.13M	1,945(H) x 1,097(V) 2.13M	1,945(H) x 1,097(V) 2.13M	1,945(H) x 1,097(V) 2.13M
Scanning System	Progressive Scan	Progressive Scan	Progressive Scan	Progressive Scan
Min. Illumination	Color : 0.055Lux (F2.0) B/W : 0.055Lux (F2.0)	Color : 0.055Lux (F2.0) B/W : 0.055Lux (F2.0)	Color : 0.055Lux (F2.0) B/W : 0.055Lux (F2.0)	Color : 0.055Lux (F2.0) B/W : 0.055Lux (F2.0)
S / N Ratio	50dB	50dB	50dB	50dB
Wide Dynamic Range	150dB	150dB	150dB	150dB
Day & Night	Electrical	Electrical	Electrical	Electrical
LENS				
Focal Length (Zoom Ratio)	2.4mm	2.8mm	3.6mm	6.0mm
Max. Aperture Ratio	F2.0	F2.0	F2.0	F2.0
Angular Field of View	H : 135.4°, V : 71.2°, D : 161.6°	H : 107.4°, V : 62.2°, D : 122.0°	H : 94.8°, V : 49.3°, D : 114.3°	H : 50.4°, V:28.8°, D : 58.1°
Lens Type	Fixed focal	Fixed focal	Fixed focal	Fixed focal
PAN / TILT / ROTATE				
Pan / Tilt / Rotate Range	-176°~+176° / 0°~30° / -90°~+90°	-176°~+176° / 0°~50° / -90°~+90°	-176°~+176° / 0°~54° / -90°~+90°	-176°~+176° / 0°~65° / -90°~+90°
MECHANICAL				
Color / Material	Black / Plastic	Black / Plastic	Black / Plastic	Black / Plastic
Dimensions (WxHxD)	Ø35.5 x 27.9mm (1.4" x 1.1")	Ø35.5 x 27.9mm (1.4" x 1.1")	Ø35.5 x 27.9mm (1.4" x 1.1")	Ø35.5 x 27.9mm (1.4" x 1.1")
Weight	27g (0.06 lb)	27g (0.06 lb)	27g (0.06 lb)	27g (0.06 lb)

* The lastest product information / specification can be found at hanwha-security.com
* Design and specifications are subject to change without notice.
* Wisenet is the proprietary brand of Hanwha Techwin.

Dimensions

Unit : mm (inch)

Ø35.5 (1.4")

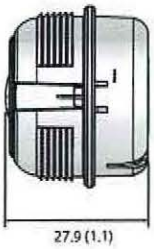

27.9 (1.1)

 2018 Hanwha Techwin Co., Ltd. All rights reserved.

WISENET X series

XNV-8080R

5M Vandal-Resistant Network IR Dome Camera

Key Features

- Max. 5megapixel (2560 x 1920) resolution
- 3.9 ~ 9.4mm (2.4x) motorized varifocal lens
- Max. 30fps@all resolutions (H.265/H.264)
- H.265, H.264, MJPEG codec supported, Multiple streaming
- Day & Night (ICR), WDR (120dB), Defog
- Loitering, Directional detection, Fog detection, Audio detection, Digital auto tracking, Sound classification, Tampering
- Motion detection, Handover
- SD/SDHC/SDXC memory slot (Max. 512GB)
- Hallway view, WiseStream II support
- IR viewable length 50m, IP67/IP66, NEMA 4X, IK10
- LDC support (Lens Distortion Correction)
- PoE / 24V AC, 12V DC, Bi-directional audio support

Dimensions

Unit : mm (inch)

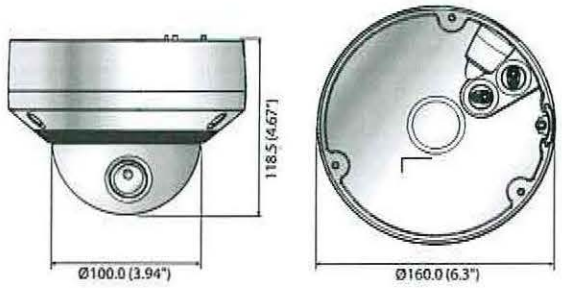

Accessories (Optional)

	XNV-8080R
VIDEO	
Imaging Device	1/1.8" 6M CMOS
Total Pixels	3,096(H) x 2,094(V)
Effective Pixels	2,616(H) x 1,976(V)
Scanning System	Progressive Scan
Min. Illumination	Color : 0.07Lux (F1.3, 1/30sec), B/W : 0Lux (IR LED on)
S / N Ratio	50dB
Video Out	CVBS : 1.0Vpp / 75Ω composite, 720 x 480(N), 720 x 576(P), for installation USB : micro USB type B, 1280 x 720 for installation
LENS	
Focal Length (Zoom Ratio)	3.9 ~ 9.4mm (2.4x) motorized varifocal
Max. Aperture Ratio	F1.3
Angular Field of View	H : 92.1° ~ 38.7° / V : 67.2° ~ 29.0° / D : 119.9° ~ 48.6°
Min. Object Distance	0.5m (1.64ft)
Focus Control	Simple focus (Motorized V/F) / Manual, Remote control via network (Manual, Simple focus)
Lens / Mount Type	DC auto iris, P-Iris / Board-in type
PAN / TILT / ROTATE	
Pan / Tilt / Rotate Range	0° ~ 354° / 0° ~ 67° / 0° ~ 355°
OPERATIONAL	
IR Viewable Length	50m (164.04ft)
Camera Title	Off / On (Displayed up to 85 characters) - W/W : English / Numeric / Special characters - China : English / Numeric / Special / Chinese characters - Common : Multi-line (Max. 5), Color (Grey / Green / Red / Blue / Black / White), Transparency, Auto scale by resolution
Day & Night	Auto (ICR) / Color / B/W / External / Schedule
Backlight Compensation	Off / BLC / HLC (Masking / Dimming), WDR
Wide Dynamic Range	120dB
Contrast Enhancement	SSDR (Off / On)
Digital Noise Reduction	SSNRV (2D+3D noise filter) (Off / On)
Digital Image Stabilization	Off / On
Defog	Off / Auto (Input from fog detection) / Manual
Motion Detection	Off / On (8ea, 8point polygonal zones), Handover
Privacy Masking	Off / On (32ea, Polygonal) - Color : Grey / Green / Red / Blue / Black / White, Mosaic
Gain Control	Off / Low / Middle / High / Manual
White Balance	ATW / AWC / Manual / Indoor / Outdoor (Included mercury & Sodium)
Contrast	Level adjustment
LDC (Lens Distortion Correction)	Off / On (5 levels with min / max)
Electronic Shutter Speed	Minimum / Maximum / Anti flicker (2 ~ 1/12,000sec)
Digital PTZ	24x, Digital PTZ (Preset, Group)
Flip / Mirror	Off / On, Hallway view : 90°/270°
Video & Audio Analytics	Tampering, Loitering, Directional detection, Defocus detection, Fog detection, Virtual line, Enter / Exit, (Dis)Appear, Audio detection, Face detection, Motion detection, Digital auto tracking, Sound classification
Alarm I/O	Input 1ea / Output 1ea
Alarm Triggers	Alarm input, Motion detection, Video & Audio analytics, Network disconnect
Alarm Events	File upload via FTP, E-mail, Notification via E-mail, Local storage (SD/SDHC/SDXC) or NAS recording at event triggers, External output, DPTZ preset
Pixel Counter	Support
NETWORK	
Ethernet	RJ-45 (10/100BASE-T)
Video Compression Format	H.265 / H.264 (MPEG-4 part 10/AVC) : Main / Baseline / High, MJPEG
Resolution	2560 x 1920, 2560 x 1440, 1920 x 1080, 1600 x 1200, 1280 x 1024, 1280 x 960, 1280 x 720, 1024 x 768, 800 x 600, 800 x 448, 720 x 576, 720 x 480, 640 x 480, 640 x 360, 320 x 240
Max. Framerate	H.265 / H.264 : Max. 30fps at all resolutions, MJPEG : Max. 30fps
Smart Codec	Manual mode (Area-based : 5ea)
WiseStream II	Support
Video Quality Adjustment	H.265 / H.264 : Target bitrate level control, MJPEG : Target bitrate level control
Bitrate Control Method	H.265 / H.264 : CBR or VBR, MJPEG : VBR
Streaming Capability	Multiple streaming (Up to 10 profiles)
Audio In	Selectable (Mic in / Line in), Supply voltage : 2.5V DC (4mA), Input impedance : approx. 2K Ohm
Audio Out	Line out, Max output level : 1Vrms
Audio Compression Format	G.711 u-law/G.726 selectable, G.726 (ADPCM) 8KHz, G.711 8KHz G.726 : 16Kbps, 24Kbps, 32Kbps, 40Kbps, AAC-LC : 48Kbps at 8/16/32/48KHz
Audio Communication	Bi-directional (2-way)
IP	IPv4, IPv6
Protocol	TCP/IP, UDP/IP, RTP(UDP), RTP(TCP), RTCP, RTSP, NTP, HTTP, HTTPS, SSL/TLS, DHCP, PPPoE, FTP, SMTP, ICMP, IGMP, SNMPv1/v2c/v3(MIB-2), ARP, DNS, DDNS, QoS, PIM-SM, UPnP, Bonjour
Security	HTTPS(SSL) login authentication, Digest login authentication IP address filtering, User access log, 802.1X authentication (EAP-TLS, EAP-LEAP)
Streaming Method	Unicast / Multicast
Max. User Access	20 users at unicast mode
Edge Storage	SD/SDHC/SDXC 2slot (Up to 512GB) - Continuous recording (1st slot to 2nd slot) NAS (Network Attached Storage), Local PC for instant recording
Application Programming Interface	ONVIF profile S/G, SUNAPI (HTTP API), Wisenet Open Platform
Webpage Language	English, Korean, Chinese, French, Italian, Spanish, German, Japanese, Russian, Swedish, Portuguese, Czech, Polish, Turkish, Dutch, Hungarian, Greek
Web Viewer	Supported OS : Windows 7, 8.1, 10, Mac OS X 10.10, 10.11, 10.12 Non-plugin Webviewer - Supported Browser : Google Chrome 54, MS Edge 38, Mozilla Firefox 49(Window 64bit only), Apple Safari 9 * Mac OS X only Plug-in Webviewer - Supported Browser : MS Explore 11, Apple Safari 9 * Mac OS X only
Central Management Software	SmartViewer, SSM
ENVIRONMENTAL	
Operating Temperature / Humidity	-40°C ~ +55°C (-40°F ~ +131°F) / Less than 90% RH
Storage Temperature / Humidity	-50°C ~ +60°C (-58°F ~ +140°F) / Less than 90% RH
Ingress Protection / Vandal Resistance	IP67, IP66, NEMA 4X / IK10
ELECTRICAL	
Input Voltage / Current	24V AC ±10%, 12V DC ±10%, PoE (IEEE802.3af)
Power Consumption	Max. 11.5W (12VDC), Max. 12.95W (PoE), Max. 14W (24VAC)
MECHANICAL	
Color / Material	Ivory / Aluminum
Dimensions (WxH)	Ø160.0 x 118.5mm (Ø6.3" x 4.67")
Weight	1.01Kg (2.23lb)

* The lastest product information / specification can be found at hanwha-security.com
* Design and specifications are subject to change without notice.

FC | UL | CE | FIRST EDITION 01-2017 - 2017 Hanwha Techwin Co., Ltd. All rights reserved.

Hanwha Techwin

XND-8020R/8030R/8040R

5 MP Network IR Dome Camera

Key Features

- 5 megapixel (2560 x 1920) resolution
- Built-in 3.7mm fixed lens (XND-8020R)
  4.6mm fixed lens (XND-8030R)
  7mm fixed lens (XND-8040R)
- 30fps@all resolutions (H.265/H.264)
- H.265, H.264, MJPEG codec supported, Multiple streaming
- Day & Night (ICR), WDR (120dB), Defog
- Loitering, Directional detection, Fog detection, Audio detection, Digital auto tracking, Sound classification, Heatmap, People counting, Queue management, Tampering
- Motion detection, Handover
- SD/SDHC/SDXC memory slot (Max. 512GB), PoE / 12V DC
- Hallway view, WiseStream II support
- IR viewable length 30m, IK08
- LDC support (Lens Distortion Correction)

Dimensions

Unit : mm (inch)

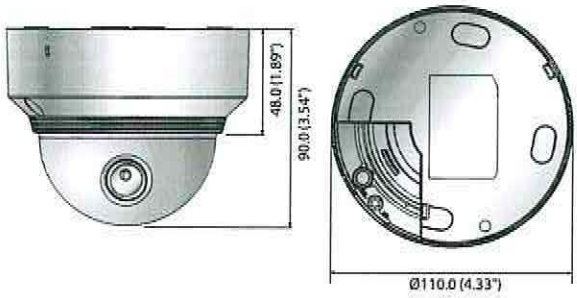

Accessories (Optional)

SBP-300B SBP-300PM

SBP-300HM7 SBP-300LM SBP-300CM SBP-300WM1 SBP-300VM SBP-300KM SBP-300NB

	XND-8020R/8030R/8040R
VIDEO	
Imaging Device	1/1.8" 6 MP CMOS
Total Pixels	3,096(H) x 2,094(V)
Effective Pixels	2,616(H) x 1,976(V)
Scanning System	Progressive Scan
Min. Illumination	Color : 0.2Lux (F1.6, 1/30sec), B/W : 0Lux (IR LED on)
S / N Ratio	50dB
Video Out	CVBS : 1.0Vpp / 75Ω composite, 720 x 480(N), 720 x 576(P), for installation USB : micro USB type B, 1280 x 720 for installation
LENS	
Focal Length (Zoom Ratio)	3.7mm fixed (XND-8020R), 4.6mm fixed (XND-8030R), 7mm fixed (XND-8040R)
Max. Aperture Ratio	F1.6
Angular Field of View	H : 97.5° / V : 71.9° / D : 126.2° (XND-8020R), H : 77.9° / V : 57.9° / D : 98.7° (XND-8030R), H : 50.7° / V : 37.8° / D : 63.8° (XND-8040R)
Min. Object Distance	0.4m (1.31ft)
Focus Control	Manual
Lens / Mount Type	Fixed / Board-in type
PAN / TILT / ROTATE	
Pan / Tilt / Rotate Range	0° ~ 354° / 0° ~ 67° / 0° ~ 355°
OPERATIONAL	
IR Viewable Length	30m (98.43ft)
Camera Title	Off / On (Displayed up to 85 characters) - W/W : English / Numeric / Special characters - China : English / Numeric / Special / Chinese characters - Common : Multi-line (Max. 5), Color (Grey / Green / Red / Blue / Black / White), Transparency, Auto scale by resolution
Day & Night	Auto (ICR) / Color / B/W / External / Schedule
Backlight Compensation	Off / BLC / HLC (Masking / Dimming), WDR
Wide Dynamic Range	120dB
Contrast Enhancement	SSDR (Off / On)
Digital Noise Reduction	SSNRV (2D+3D noise filter) (Off / On)
Digital Image Stabilization	Off / On
Defog	Off / Auto (Input from fog detection) / Manual
Motion Detection	Off / On (8ea, 8point polygonal zones), Handover
Privacy Masking	Off / On (32ea, Polygonal) - Color : Grey / Green / Red / Blue / Black / White, Mosaic
Gain Control	Off / Low / Middle / High
White Balance	ATW / AWC / Manual / Indoor / Outdoor (Included mercury & Sodium)
Contrast	Level adjusment
LDC (Lens Distortion Correction)	Off / On (5 levels with min. / max)
Electronic Shutter Speed	Minimum / Maximum / Anti flicker (2 ~ 1/12,000sec)
Digital PTZ	24x, Digital PTZ (Preset, Group)
Flip / Mirror	Off / On, Hallway view : 90°/270°
Video & Audio Analytics	Tampering, Loitering, Directional detection, Defocus detection, Fog detection, Virtual line, Enter / Exit, (Dis)Appear, Audio detection, Face detection, Motion detection, Digital auto tracking, Sound classification, Heatmap, People counting, Queue management
Alarm I/O	Input 1ea / Output 1ea
Alarm Triggers	Alarm input, Motion detection, Video & Audio analytics, Network disconnect
Alarm Events	File upload via FTP, E-mail, Notification via E-mail, Local storage (SD/SDHC/SDXC) or NAS recording at event triggers, External output, DPTZ preset
Pixel Counter	Support
NETWORK	
Ethernet	RJ-45 (10/100BASE-T)
Video Compression Format	H.265 / H.264 (MPEG-4 part 10/AVC) : Main / Baseline / High, MJPEG
Resolution	2560 x 1920, 2560 x 1440, 1920 x 1080, 1600 x 1200, 1280 x 1024, 1280 x 960, 1280 x 720, 1024 x 768, 800 x 600, 800 x 448, 720 x 576, 720 x 480, 640 x 480, 640 x 360, 320 x 240
Max. Framerate	H.265 / H.264 : Max. 30fps at all resolutions, MJPEG : Max. 30fps
Smart Codec	Manual mode (Area-based : 5ea)
WiseStream II	Support
Video Quality Adjustment	H.265 / H.264 : Target bitrate level control, MJPEG : Target bitrate level control
Bitrate Control Method	H.265 / H.264 : CBR or VBR, MJPEG : VBR
Streaming Capability	Multiple streaming (Up to 10 profiles)
Audio In	Selectable (Built-in Mic / Mic in / Line in), Max output level : 1Vrms Supply voltage : 2.5V DC (4mA), Input impedance : approx. 2K Ohm
Audio Out	Line out, Max output level : 1.7rms
Audio Compression Format	G.711 u-law/G.726 selectable, G.726 (ADPCM) 8KHz, G.711 8KHz G.726 : 16Kbps, 24Kbps, 32Kbps, 40Kbps, AAC-LC : 48Kbps at 8/16/32/48KHz
Audio Communication	Bi-directional (2-way)
IP	IPv4, IPv6
Protocol	TCP/IP, UDP/IP, RTP(UDP), RTP(TCP), RTCP, RTSP, NTP, HTTP, HTTPS, SSL/TLS, DHCP, PPPoE, FTP, SMTP, ICMP, IGMP, SNMPv1/v2c/v3(MIB-2), ARP, DNS, DDNS, QoS, PIM-SM, UPnP, Bonjour
Security	HTTPS(SSL) login authentication, Digest login authentication IP address filtering, User access log, 802.1X authentication (EAP-TLS, EAP-LEAP)
Streaming Method	Unicast / Multicast
Max. User Access	20 users at unicast mode
Edge Storage	SD/SDHC/SDXC 2slot (Up to 512GB) - Continuous recording (1st slot to 2nd slot) NAS (Network Attached Storage), Local PC for instant recording
Application Programming Interface	ONVIF profile S/G, SUNAPI(HTTP API), Wisenet Open Platform
Webpage Language	English, Korean, Chinese, French, Italian, Spanish, German, Japanese, Russian, Swedish, Portuguese, Czech, Polish, Turkish, Dutch, Hungarian, Greek
Web Viewer	Supported OS : Windows 7, 8.1, 10, Mac OS X 10.10, 10.11, 10.12 Non-plugin Webviewer - Supported Browser : Google Chrome 54, MS Edge 38, Mozilla Firefox 49(Window 64bit only), Apple Safari 9 * Mac OS X only Plug-in Webviewer - Supported Browser : MS Explorer 11, Apple Safari 9 * Mac OS X only
Central Management Software	SmartViewer, SSM
ENVIRONMENTAL	
Operating Temperature / Humidity	-10°C ~ +55°C (+14°F ~ +131°F) / Less than 90% RH
Storage Temperature / Humidity	-50°C ~ +60°C (-58°F ~ +140°F) / Less than 90% RH
Vandal Resistance	IK08
ELECTRICAL	
Input Voltage / Current	12 / DC ±10%, PoE (IEEE802.3af)
Power Consumption	Max. 8W (12VDC), Max. 9W (PoE)
MECHANICAL	
Color / Material	Ivory / Metal
Dimensions (WxH)	Ø110.0 x 90.0mm (Ø4.33" x 3.54")
Weight	365g (0.80lb)

* Design and specifications are subject to change without notice.

 2017 Hanwha Techwin Co., Ltd. All rights reserved.

WISENET P

PNO-9080R

4K Network IR Bullet Camera

Key Features

- Max. 12megapixel (4000 x 3000) resolution
- Max. 20fps@12M, Max.30fps@8M
- 0.3Lux@F1.6 (Color), 0Lux (B/W : IR LED on)
- 4.5 ~ 10mm (2.2x) motorized varifocal lens
- H.265, H.264, MJPEG suppport
- Day & Night (ICR), WDR (120dB), Simple focus, P-Iris
- Motion detection, Defocus detection, Tampering
- SD/SDHC/SDXC memoty slot (Max, 128GB), NAS, Local PC support
- Hallway view (Rotate 90° / 270°)
- WiseStream support, Digital auto tracking
- IP66, IK10, Bi-directional audio support

Dimensions

Unit : mm (inch)

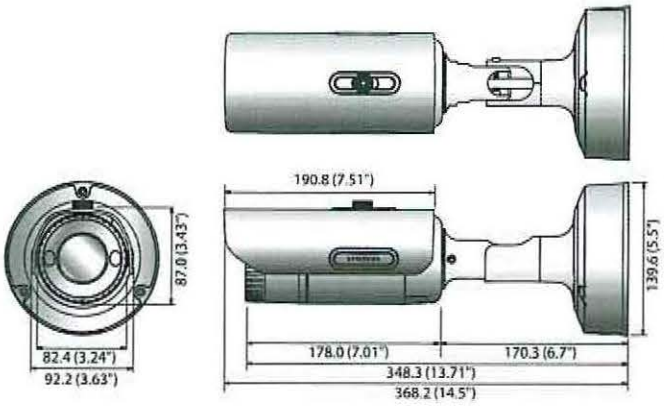

Accessories (Optional)

SBP-301PM

SBP-302PM

	PNO-9080R
VIDEO	
Imaging Device	1/1.7" 12.4M CMOS
Total Pixels / Effective Pixels	4,168(H) x 3,062(V) / 4,072(H) x 3,046(V)
Scanning System	Progressive
Min. Illumination	Color : 0.3Lux (1/30sec, F1.6, 30IRE), 0.01Lux (2sec, F1.6, 30IRE) B/W : 0Lux (IR LED on)
S / N Ratio	50dB
Video Output	CVBS : 1.0Vpp / 75Ω composite, 714 x 480(N), 702 x 576(P), for installation DIP connector type
LENS	
Focal Length (Zoom Ratio)	4.5 ~ 10mm (2.2x) motorized varifocal
Max. Aperture Ratio	F1.6
Angular Field of View	[4096 x 2160] H : 100.3°(Wide) ~ 45.6°(Tele) / V : 49.7°(Wide) ~ 24.0°(Tele) [3840 x 2160] H : 92.3°(Wide) ~ 42.6°(Tele) / V : 49.7°(Wide) ~ 24.0°(Tele)
Min. Object Distance	0.5m (1.64ft)
Focus Control	Simple focus (Motorized V/F) / Manual, Remote control via network (Manual, Simple focus)
Lens Type / Mount Type	P-Iris mode / Board-in type
OPERATIONAL	
IR Viewable Length	40m (131.23ft)
Camera Title	Off / On (Displayed up to 60 characters) - W/W : English / Numeric / Special characters - China : English / Numeric / Special / Chinese characters - Common : Multi-line (Max. 5), Color (Grey / Green / Red / Blue / Black / White), Transparency, Auto scale by resolution
Day & Night	Auto (ICR) / Color / B/W / External / Schedule
Backlight Compensation	Off / BLC / WDR
Wide Dynamic Range	120dB
Contrast Enhancement	SSDR (Off / On)
Digital Noise Reduction	SSNR (2D+3D noise filter) (Off / On)
Defog	Off / Auto / Manual
Motion Detection	Off / On (8ea, Polygonal)
Privacy Masking	Off / On (16ea, Polygonal) - Color : Gray / Green / Red / Blue / Black / White
Gain Control	Off / Low / Middle / High
White Balance	ATW / AWC / Manual / Indoor / Outdoor (Include mercury & sodium)
Electronic Shutter Speed	Minimum / Maximum / Anti flicker (2 ~ 1/12,000sec)
Flip / Mirror	Off / On, Hallway : 90° / 270°
Intelligent Video Analytics	Tampering (Scene change), Virtual line, Enter / Exit, (Dis)Appear, Audio detection, Defocus detection, Digital auto tracking - with metadata
Alarm I/O	Input 1ea / Output 1ea
Alarm Triggers	Alarm input, Motion detection, Video analytics, Audio detection, Network disconnect
Alarm Events	File upload via FTP and E-mail, Notification via E-mail Local storage (SD/SDHC/SDXC) or NAS recording at event triggers, External output
Pixel Counter	Support (Plug-in viewer only)
NETWORK	
Ethernet	RJ-45 (10/100/1000BASE-T)
Video Compression Format	H.265 / H.264 (MPEG-4 part 10/AVC) : Main / Baseline / High, MJPEG
Resolution	[8M mode] 4096 x 2160, 3840 x 2160, 2592 x 1944, 2592 x 1464, 1920 x 1080, 1600 x 1200, 1280 x 1024, 1280 x 960, 1280 x 720, 1024 x 768, 800 x 600, 800 x 448, 720 x 576, 720 x 480, 640 x 480, 640 x 360, 320 x 240 [12M mode] 4000 x 3000, 3840 x 2160, 2592 x 1944, 2592 x 1464, 1920 x 1080, 1600 x 1200, 1280 x 1024, 1280 x 960, 1280 x 720, 1024 x 768, 800 x 600, 800 x 448, 720 x 576, 720 x 480, 640 x 480, 640 x 360, 320 x 240
Max. Framerate	H.265 / H.264 : 20fps@4000 x 3000, 30fps@4096 x 2160 MJPEG : 2fps@4000 x 3000 ~ 2592 x 1464, 15fps@1920 x 1080 ~ 320 x 240
Smart Codec / WiseStream	Manual mode (Area-based : 5ea) / Support
Video Quality Adjustment	H.265 / H.264 : Target bitrate level control, MJPEG : Quality level control
Bitrate Control Method	H.265 / H.264 : CBR or VBR, MJPEG : VBR
Streaming Capability	Multiple streaming (Up to 3 profiles)
Audio In	Selectable (Mic in / Line in), Supply voltage : 2.5V DC (4mA), Input impedance : approx. 2K Ohm
Audio Out	Line out (3.5mm mono jack), Max output level : 1Vrms
Audio Compression Format	G.711 u-law/G.726 selectable, G.726 (ADPCM) 8KHz, G.711 8kHz G.726 : 16Kbps, 24Kbps, 32Kbps, 40Kbps, AAC-LC : 48Kbps at 16kHz
Audio Communication	Bi-directional audio (2-way)
IP	IPv4, IPv6
Protocol	TCP/IP, UDP/IP, RTP(UDP), RTP(TCP), RTCP, RTSP, NTP, HTTP, HTTPS, SSL/TLS, DHCP, PPPoE, FTP, SMTP, ICMP, IGMP, SNMPv1/v2c/v3(MIB-2), ARP, DNS, DDNS, QoS, IPv4-STA, UPnP, Bonjour
Security	HTTPS(SSL) login authentication, Digest login authentication IP address filtering, User access log, 802.1x authentication (EAP-TLS, EAP-LEAP)
Streaming Method	Unicast / Multicast
Max. User Access	15 users at unicast mode
Edge Storage	SD/SDHC/SDXC (128GB) - Motion images recorded in the SD/SDHC/SDXC memory card can be downloaded, Camera can detect automatically when the memory is connected, Memory status display (Normal / Error / Active / Formatting / Lock) NAS (Network Attached Storage), Local PC for instant recording (Plug-in viewer only)
Application Programming Interface	ONVIF profile S/G, SUNAPI (HTTP API), SVNP, Wisenet Open Platform
Webpage Language	English, French, German, Spanish, Italian, Chinese, Russian, Japanese, Swedish, Portuguese, Turkish, Polish, Czech, Dutch, Hungary, Greek
Web Viewer	Supported OS : Windows 7, 8.1, 10, Mac OS X 10.9, 10.10, 10.11 Plug-in free Webviewer - Supported Browser : Google Chrome 47, MS Edge 20 Plug-in Webviewer - Supported Browser : MS Explore 11, Mozilla Firefox 43, Apple Safari 9 * Mac Os X only
Central Management Software	SmartViewer
ENVIRONMENTAL	
Operating Temperature / Humidity	-40°C ~ +55°C (-40°F ~ +131°F) / Less than 90% RH * Start up should be done at above -35°C (-31°F)
Storage Temperature / Humidity	-40°C ~ +60°C (-40°F ~ +140°F) / Less than 90% RH
Ingress Protection / Vandal Resistance	IP66 / IK10
ELECTRICAL	
Input Voltage / Current	24 / AC, 12V DC, PoE (IEEE802.3af, Class3)
Power Consumption	12V DC : Max. 11.55W, PoE : Max 12.95W, 24V AC (50/60Hz) : 14.08W - Heater on 12V DC : Max. 10.45W, PoE : Max 11.77W, 24V AC (50/60Hz) : 12.43W - Heater off
MECHANICAL	
Color / Material	Dark gray / Aluminium
Dimensions (WxHxD)	87.4 x 87.0 x 348.3mm (3.24" x 3.43" x 13.71") (Without sunshield)
Weight	1.4Kg (3.09 lb)

* The lastest product information / sepecification can be found at hanwha-security.com

Hanwha Techwin

UniFi Network USW Pro PoE

DATASHEET

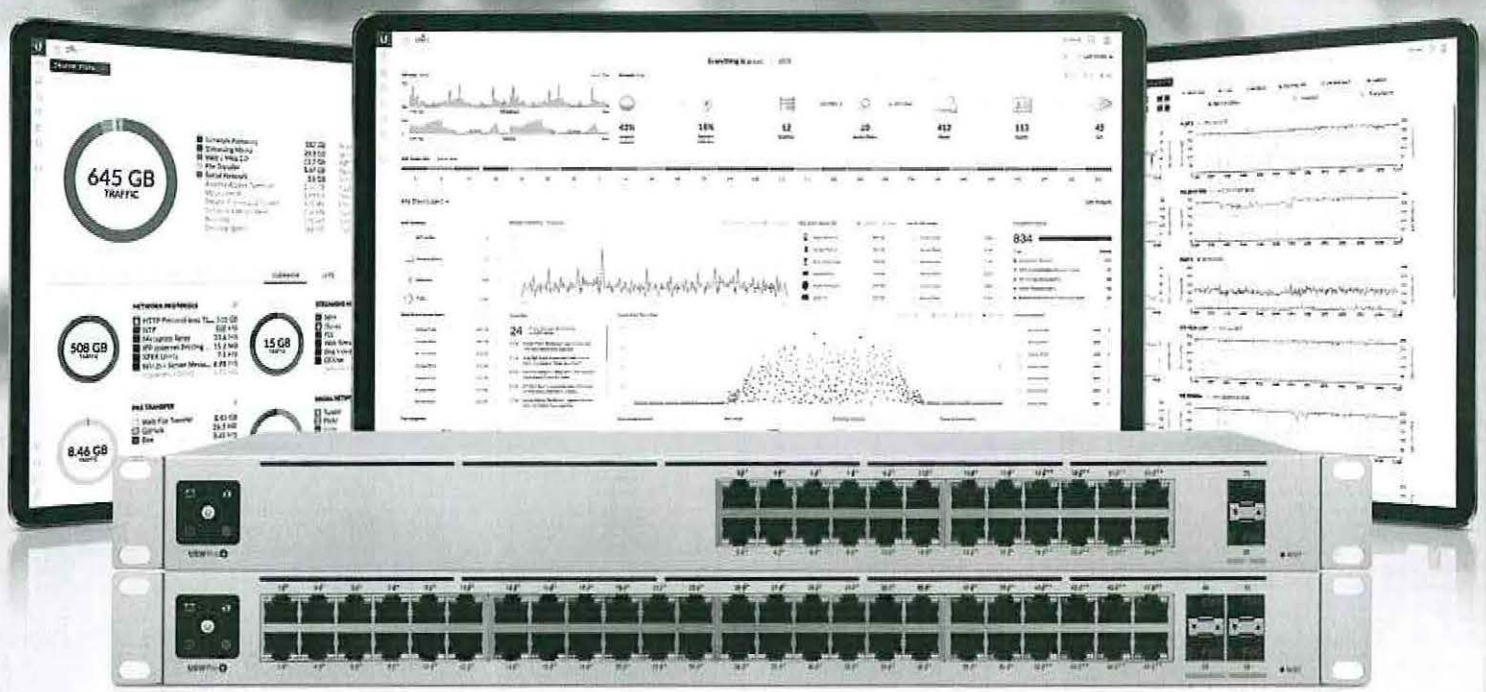

802.3at/bt PoE Gigabit Switches with Layer 3 Features and SFP+

Auto-Sensing IEEE 802.3af/at/bt PoE

SFP+ Ports for 10G Links

Integrated Fans for Near-Silent Cooling

Models: USW-Pro-24-PoE, USW-Pro-48-PoE

Overview

Expand and power your network with the UniFi® Pro PoE Switch, part of the Ubiquiti® UniFi Enterprise System. It is available in two models:

- **USW-Pro-24-PoE** 24 RJ45 ports with 2 SFP+ ports
- **USW-Pro-48-PoE** 48 RJ45 ports with 4 SFP+ ports

Layer 3 Features

In addition to Layer 2 switching protocols and features, the UniFi Pro PoE Switch offers Layer 3 capabilities*, such as inter-VLAN routing, static routing, and DHCP server functionality.

* *Available in a future software release*

Near-Silent Cooling

The UniFi Pro PoE Switch can be located in any workspace. Its integrated fans have built-in PWM (Power Management) control, air ducts and covers, and temperature sensors for the best user experience.

Fiber Connectivity

SFP+ ports enable high-capacity uplinks of up to 10 Gbps, so you can directly connect to a high-performance storage server or deploy a long-distance uplink to another switch.

802.3bt PoE++

PoE support simplifies your network infrastructure and cabling. Eight ports offer 802.3bt PoE++ to provide up to 64W of power (per port) to your high-power PoE devices. Remaining ports offer 802.3af/at PoE.

Redundant Power Option

The UniFi Pro PoE Switch supports an external DC input interface, the proprietary USP RPS interface, as a redundant power feature for backup if the internal PSU fails.

Deployment Example

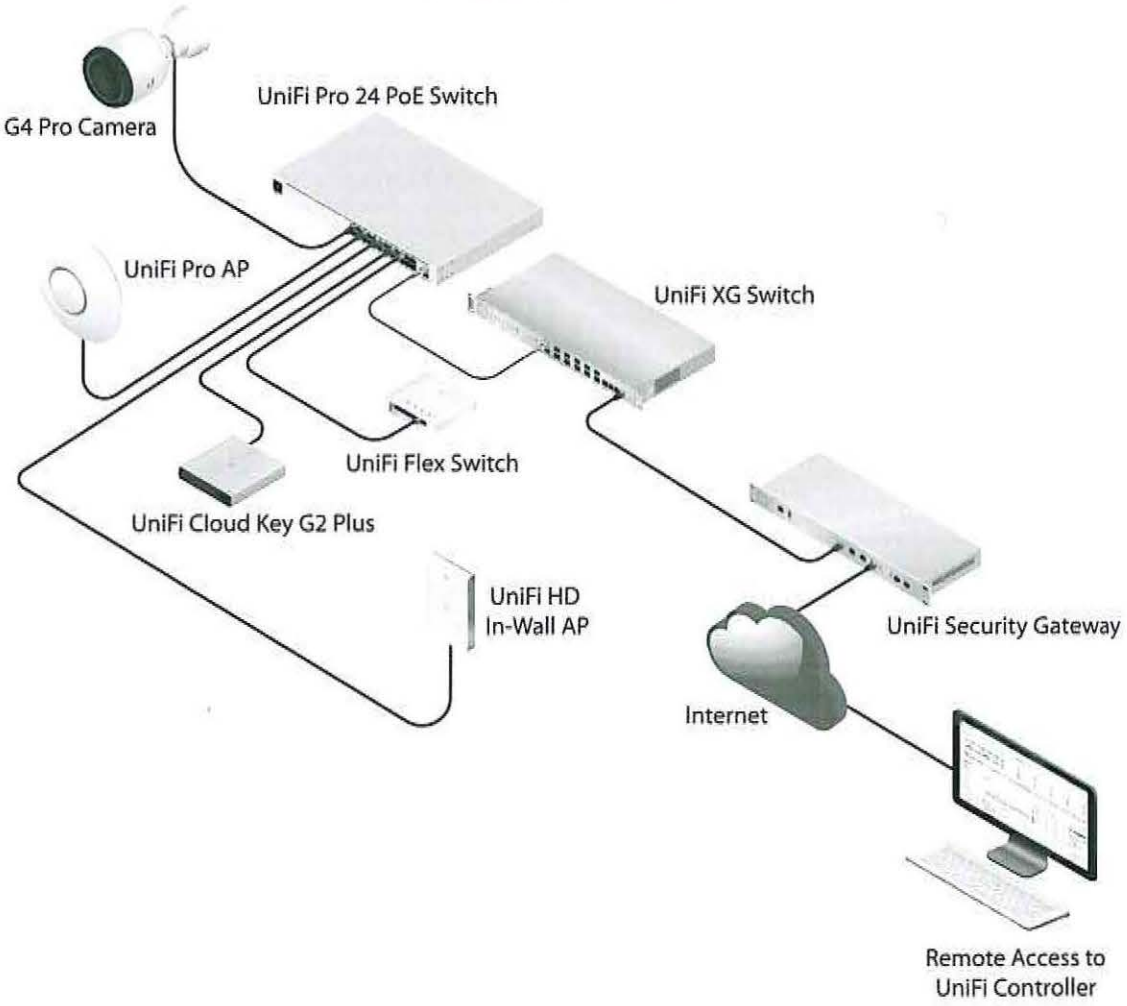

The USW-Pro-24-PoE powers the UniFi Video Camera G4 Pro, UniFi AC Pro AP, UniFi AC IW AP, and UniFi Cloud Key G2 Plus with 802.3af/at PoE, while delivering 802.3bt PoE++ to the USW-Flex.

UniFi Pro 24-Port PoE Switch

- (16) Gigabit RJ45 ports with 802.3af/at
- (8) Gigabit RJ45 ports with 802.3bt
- (2) 1/10G SFP+ ports
- 1U Rackmountable (hardware included)

USW-Pro-24-PoE

UniFi Pro 48-Port PoE Switch

- (40) Gigabit RJ45 ports with 802.3af/at
- (8) Gigabit RJ45 ports with 802.3bt
- (4) 1/10G SFP+ ports
- 1U Rackmountable (hardware included)

USW-Pro-48-PoE

Innovative Display

The 1.3" touchscreen displays status information for easy monitoring and quick troubleshooting.

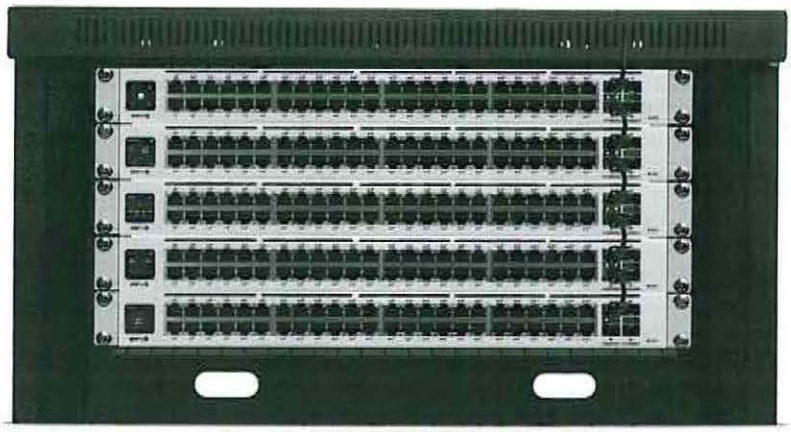

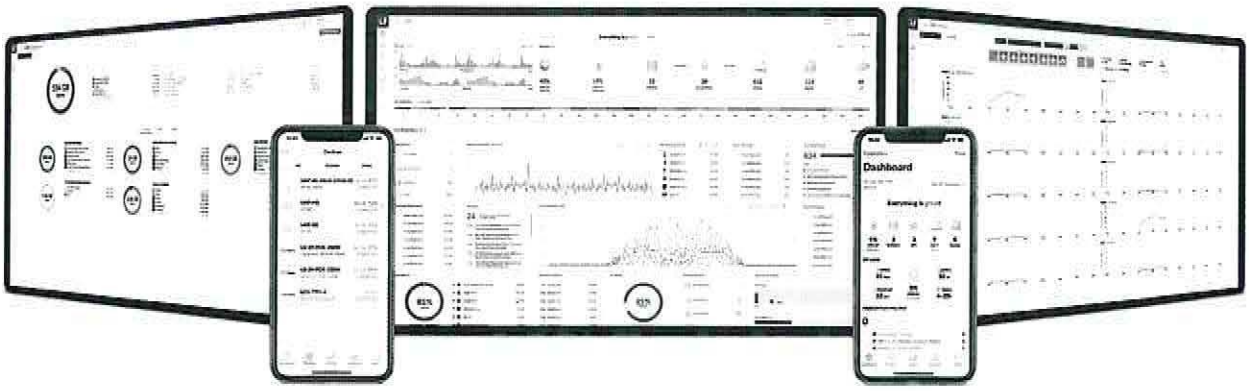

Scalable UniFi Network Controller

Management Capabilities

The UniFi Network Controller can provision UniFi devices, map out networks, and quickly manage system traffic. Important network details are logically organized for a simplified, yet powerful, interface.

Network Overview

From a single pane of glass, view network topology and configuration, real-time statistics, and debugging metrics. Monitor your network's vitals and make on-the-fly adjustments as needed.

Deep Packet Inspection

Ubiquiti's proprietary Deep Packet Inspection (DPI) engine includes the latest application identification signatures to track which applications (and IP addresses) are using the most bandwidth.

Detailed Analytics

The UniFi Network Controller provides configurable reporting and analytics to manage large user populations and expedite troubleshooting. Advanced search and sorting capabilities make network management more efficient.

Multi-Site Management

A single controller running in the cloud can manage multiple sites: multiple, distributed deployments and multi-tenancy for managed service providers. Each site is logically separated and has its own configuration, maps, statistics, guest portal, and administrator accounts.

Switch Configuration

You can access any managed UniFi Switch through the UniFi Controller to configure a variety of features:

- Operation mode (switching, mirroring, or aggregate) per port
- Network/VLAN configuration
- Jumbo frame and flow control services
- Network settings
- Storm control setting per port
- Spanning tree configuration
- 802.1X control and RADIUS VLAN
- Debug terminal option for command-line interface

Switch Port Status

You can also view status information for each port:

- Connection speed and duplex mode
- TX/RX data rates
- Network/VLAN setting

Software Features

The UniFi Network Controller software offers the following features:

- Centralized configuration management (including configuration cloning)
- Auto-MDIX automatically adjusts as needed for straight through or crossover cable
- 802.1X (RADIUS) authentication and dynamic VLAN

Download on the App Store

GET IT ON Google Play

USW-Pro-24-PoE	
Dimensions	442.4 x 285.4 x 43.7 mm (17.42 x 11.24 x 1.72")
Weight With Brackets	4.30 kg (9.48 lb) 4.39 kg (9.68 lb)
Interfaces Networking Management	 (24) 10/100/1000 RJ45 Ports (2) 1/10G SFP+ Ethernet Ports Ethernet In-Band
Total Non-Blocking Throughput	44 Gbps
Switching Capacity	88 Gbps
Forwarding Rate	65.472 Mpps
Power Method Universal Input USP RPS DC Input	 100-240VAC, 50/60 Hz 52VDC, 7.69A; 11.5VDC, 2.61A
Power Supply	AC/DC, Internal, 450W
Voltage Range	100 to 240VAC
Max Power Consumption (Excluding PoE Output)	50W
LEDs System RJ45 Data Ports SFP+ Data Ports	 Status PoE; Speed/Link/Activity Link/Activity
ESD/EMP Protection	Air: ± 16 kV, Contact: ± 12 kV
Shock and Vibration	ETSI300-019-1.4 Standard
Operating Temperature	-5 to 40° C (23 to 104° F)
Operating Humidity	10 - 90% Noncondensing
Certifications	CE, FCC, IC

PoE	
Total Available PoE	400W
PoE Interfaces Ports 1-16 Ports 17-24	 PoE+ IEEE 802.3af/at (Pins 1, 2+; 3, 6-) 60W PoE++ IEEE 802.3bt (Pair A 1, 2+; 3, 6-) (Pair B 4 , 5+; 7, 8-)
Max. PoE Wattage per Port by PSE 802.3at 802.3bt	 32W 64W
Voltage Range 802.3af Mode 802.3at/bt Mode	 44-57V 50-57V

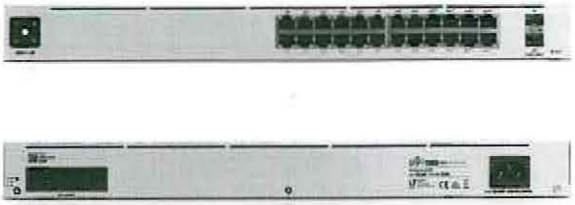

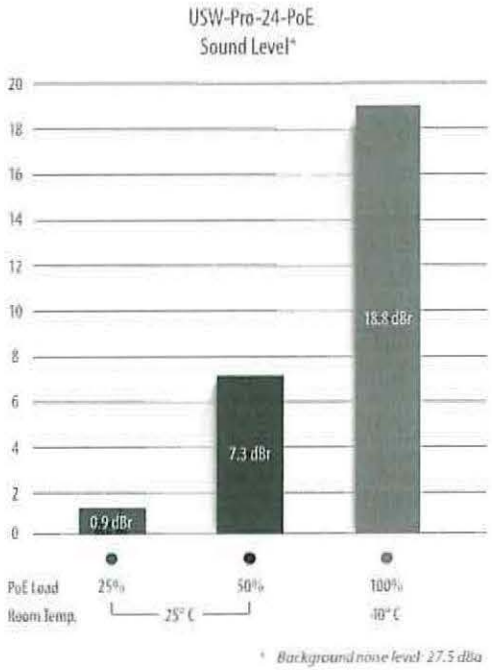

* Background noise level: 27.5 dBa

USW-Pro-48-PoE	
Dimensions	442.4 x 399.6 x 43.7 mm (17.42 x 15.73 x 1.72")
Weight With Brackets	6.25 kg (13.78 lb) 6.34 kg (13.98 lb)
Interfaces Networking Management	 (48) 10/100/1000 RJ45 Ports (4) 1/10G SFP+ Ethernet Ports Ethernet In-Band
Total Non-Blocking Throughput	88 Gbps
Switching Capacity	176 Gbps
Forwarding Rate	130.944 Mpps
Power Method Universal Input USP RPS DC Input	 100-240VAC, 50/60 Hz 52VDC, 11.54A; 11.5VDC, 5.22A
Power Supply	AC/DC, Internal, 660W
Voltage Range	100 to 240VAC
Max Power Consumption (Excluding PoE Output)	60W
LEDs System RJ45 Data Ports SFP+ Data Ports	 Status PoE; Speed/Link/Activity Link/Activity
ESD/EMP Protection	Air: ± 16 kV, Contact: ± 12 kV
Shock and Vibration	ETSI300-019-1.4 Standard
Operating Temperature	-5 to 40° C (23 to 104° F)
Operating Humidity	10 - 90% Noncondensing
Certifications	CE, FCC, IC

PoE	
Total Available PoE	600W
PoE Interfaces Ports 1-40 Ports 41-48	 PoE+ IEEE 802.3af/at (Pins 1, 2+; 3, 6-) 60W PoE++ IEEE 802.3bt (Pair A 1, 2+; 3, 6-) (Pair B 4 , 5+; 7, 8-)
Max. PoE Wattage per Port by PSE 802.3at 802.3bt	 32W 64W
Voltage Range 802.3af 802.3at/bt	 44-57V 50-57V

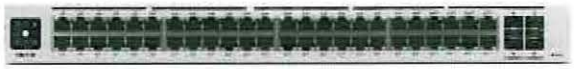

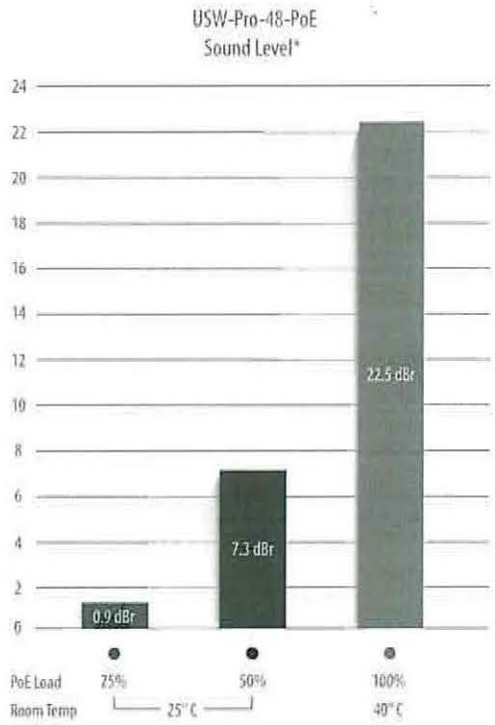

* Background noise level: 37.5 dBa

Specifications are subject to change. Ubiquiti products are sold with a limited warranty described at ui.com/support/warranty
The limited warranty requires the use of arbitration to resolve disputes on an individual basis, and, where applicable, specify arbitration instead of jury trials or class actions.
© 2019 Ubiquiti Inc. All rights reserved. Ubiquiti, Ubiquiti Networks, the Ubiquiti U logo, the Ubiquiti beam logo, and UniFi are trademarks or registered trademarks of Ubiquiti Inc. in the United States and in other countries. Apple and the Apple logo are trademarks of Apple Inc., registered in the U.S. and other countries. App Store is a service mark of Apple Inc., registered in the U.S. and other countries. Android, Google, Google Play, the Google Play logo and other marks are trademarks of Google LLC. All other trademarks are the property of their respective owners.

JL111119

DATASHEET

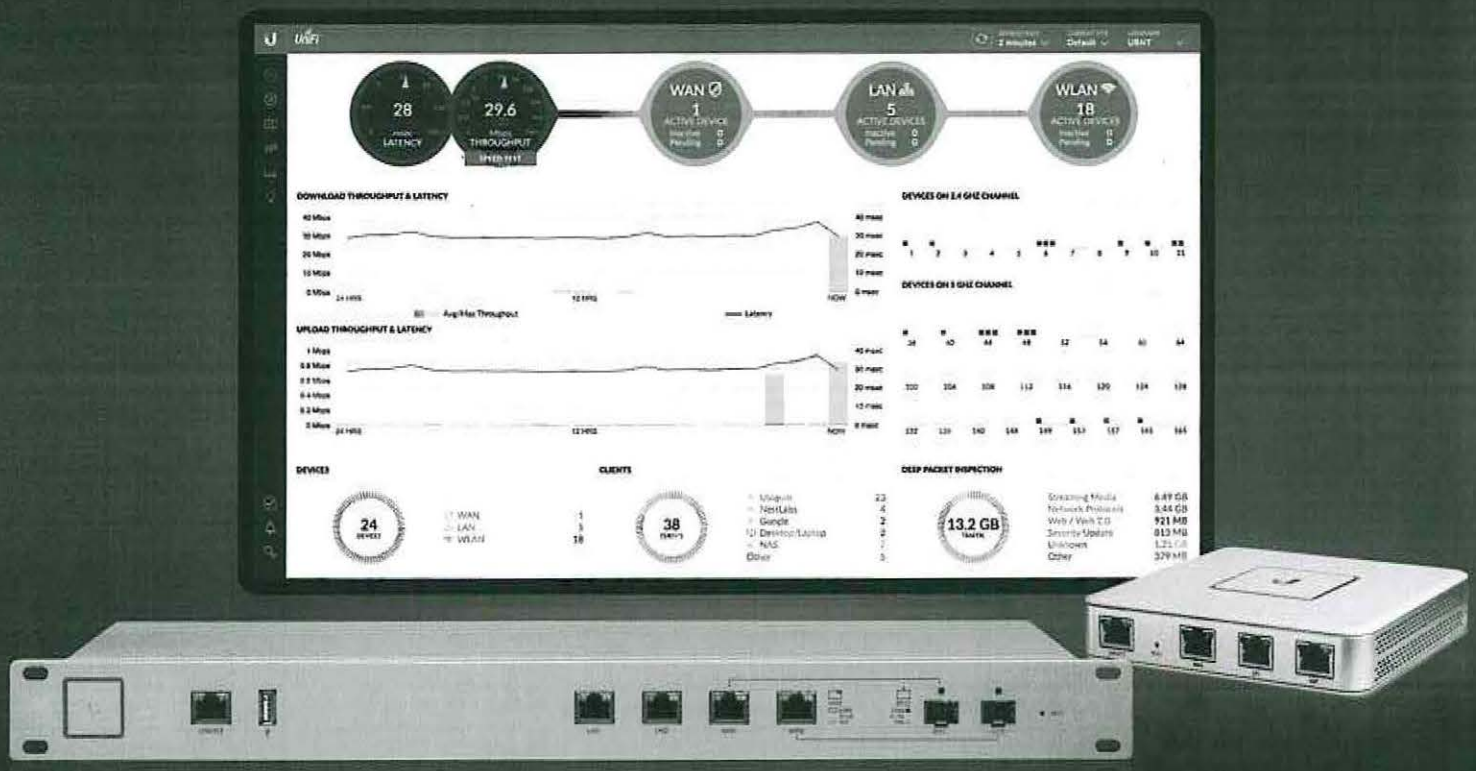

UniFi® | SECURITY GATEWAY

Enterprise Gateway Router with Gigabit Ethernet

Models: USG, USG-PRO-4

Advanced Security, Monitoring, and Management

Sophisticated Routing Features

Integrated with UniFi® Controller Software

UBIQUITI NETWORKS

UniFi® SECURITY GATEWAY

Affordable Enterprise Network Security

Ubiquiti Networks introduces the UniFi® Security Gateway, which extends the UniFi Enterprise System to encompass routing and security for your network.

The UniFi Security Gateway combines reliable security features with high-performance routing technology in a cost-effective unit.

Two models are available:

- **USG-PRO-4** Rack-mountable form factor with fiber connectivity options and a dual-core, 1 GHz processor for maximum hardware-accelerated performance.
- **USG** Wall-mountable form factor with a dual-core, 500 MHz processor for standard hardware-accelerated performance.

Powerful Firewall Performance

The UniFi Security Gateway offers advanced firewall policies to protect your network and its data.

Convenient VLAN Support

The UniFi Security Gateway can create virtual network segments for security and network traffic management.

VPN Server for Secure Communications

A site-to-site VPN secures and encrypts private data communications traveling over the Internet.

QoS for Enterprise VoIP and Video

Top QoS priority is assigned to voice and video traffic for clear calls and lag-free, video streaming.

The UniFi Security Gateway is deployed in the same manner as UniFi Access Points for wireless networking. Use the intuitive UniFi Controller to conduct device detection, provisioning, and management.

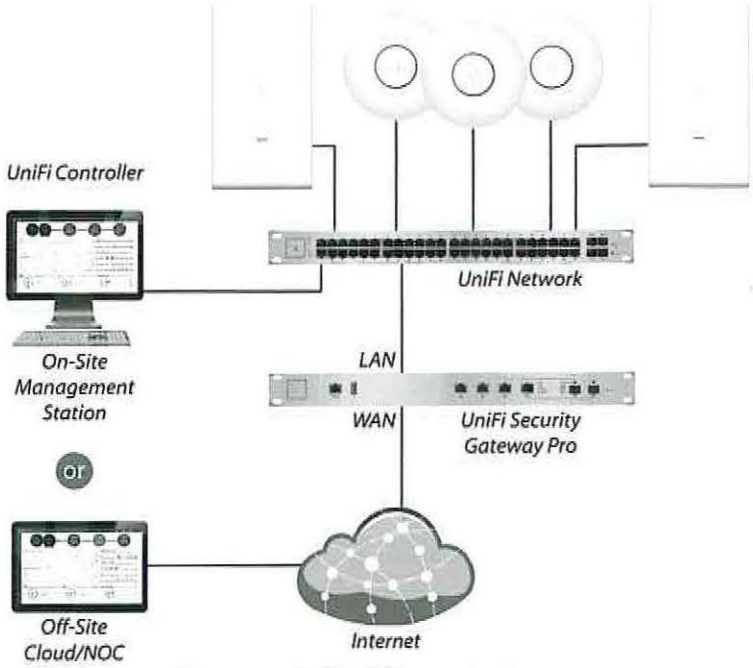

Example of a UniFi Enterprise System

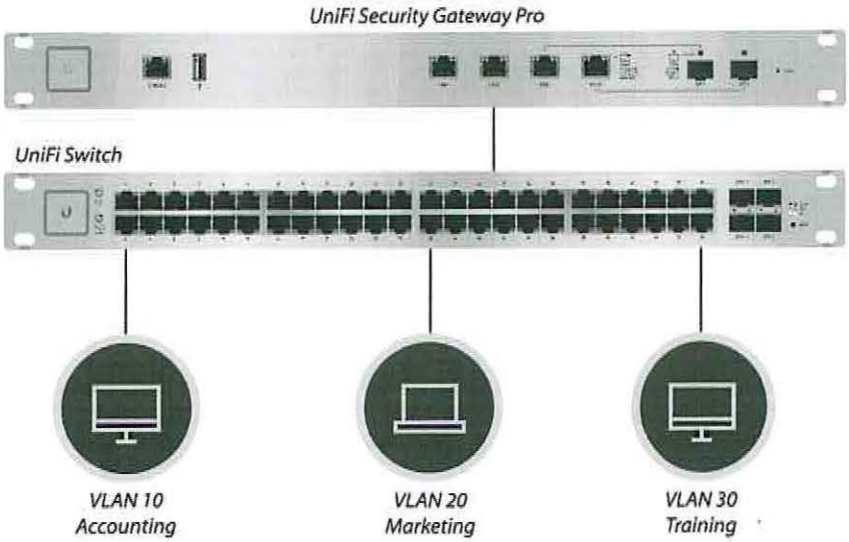

Network Segmentation with VLAN

Site-to-Site VPN Tunnel

UniFi Controller

Introducing the new UniFi Controller software featuring a refreshed UI and support for the next generation of UniFi devices.

Improved User Experience

Redesigned to be more intuitive and easier to navigate, the new UI raises the bar for enterprise network management efficiency. Important network details are logically organized for a simplified, yet powerful, interface.

Packed with Features

Use the UniFi Controller to provision thousands of UniFi APs and UniFi Security Gateways, map out networks, quickly manage system traffic, and provision additional UniFi devices.

Network Overview

A comprehensive overview of your Network Health is readily available in the new dashboard. Monitor your network's vitals and make on-the-fly adjustments as needed.

Detailed Analytics

Use the configurable reporting and analytics to monitor large user groups and expedite troubleshooting. Advanced search and sorting capabilities make network management more efficient.

Multi-Site Management

A single UniFi Controller running in the cloud can manage multiple sites: multiple, distributed deployments and multi-tenancy for managed service providers. Each site is logically separated and has its own configuration, maps, statistics, guest portal, and administrator read/write and read-only accounts.

LAN/WLAN Groups

The UniFi Controller can manage flexible configurations of large deployments. Create multiple LAN and WLAN groups and assign them to the respective UniFi devices.

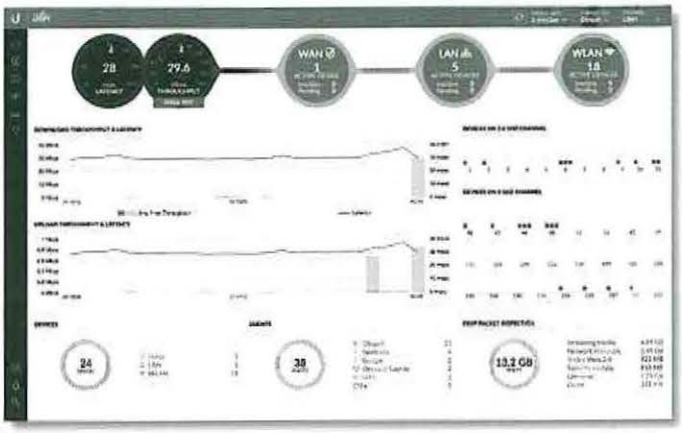

Dashboard

UniFi provides a visual representation of your network's status and delivers basic information about each network segment.

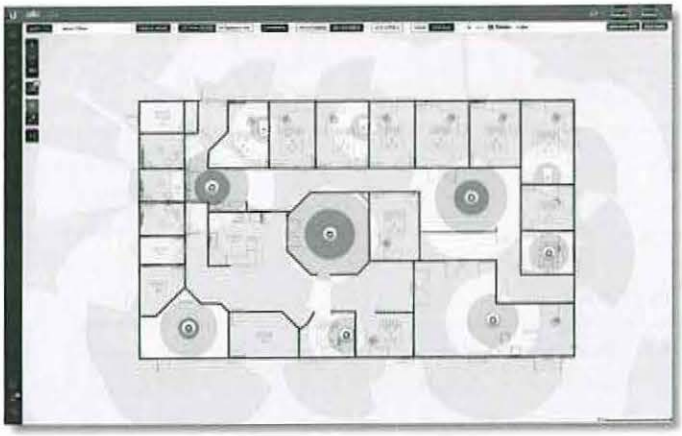

Maps

Upload a map of your location(s) or use Google Maps to represent the areas where your UniFi devices are located. Starting with v5.6.x, you can also use the predictive map feature to get a preview of coverage, so you can help avoid dead spots.

Device Configuration

The *Devices* screen displays a list of UniFi devices discovered by the UniFi Controller. You can access each managed device for device details and configuration.

UniFi SECURITY GATEWAY PRO

Model: USG-PRO-4

The USG-PRO-4 offers optional SFP ports for fiber connectivity to support backhaul applications.

- (2) 10/100/1000 RJ45 LAN Ports
- (2) 1 Gbps RJ45/SFP Combination WAN Ports*
- (1) RJ45 Serial Console Port
- Rack-Mounting Capability

* The USG-PRO-4 WAN port, as a result of being a combination SFP/GigE port, is a pure 1 Gbps port – it is incapable of both 10 Mbps and 100 Mbps FDX/HDX settings.

- Layer 3 Forwarding Performance
  - Packet Size of 64 Bytes: 2,400,000 pps
  - Packet Size of 512 Bytes or Larger: 4 Gbps (Line Rate)

Front Panel

Back Panel

UniFi SECURITY GATEWAY

Model: USG

The USG features a compact form factor and fanless operation for discreet integration.

- (3) 10/100/1000 RJ45 Ports*
- (1) RJ45 Serial Console Port
- Quiet, Fanless Operation
- Wall-Mounting Capability
- Layer 3 Forwarding Performance
  - Packet Size of 64 Bytes: 1,000,000 pps
  - Packet Size of 512 Bytes or Larger: 3 Gbps (Line Rate)

* VOIP port is available for port remapping in UniFi v5.

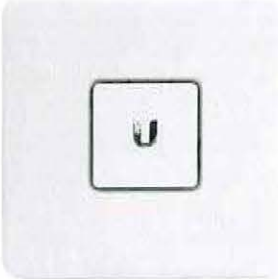

Top Panel

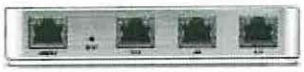

Front Panel

UniFi | SECURITY GATEWAY PRO

Specifications

UniFi USG-PRO-4	
Dimensions	484 x 44 x 164 mm (19.06 x 1.73 x 6.46")
Weight	2.3 kg (5.07 lb)
Max. Power Consumption	40W
Power Supply	Internal AC/DC Power Adapter, 60W (24V, 2.5A)
Power Input	110 - 240VAC
LEDs System Data Ports	 Status Speed/Link/Activity
Networking Interfaces Serial Console Port Data Ports	 (1) RJ45 Serial Port (2) 10/100/1000 RJ45 LAN Ports (2) 1 Gbps RJ45/SFP Combination WAN Ports
Layer 3 Forwarding Performance Packet Size: 64 Bytes Packet Size: 512 Bytes or Larger	 2,400,000 pps 4 Gbps (Line Rate)
Processor	Dual-Core 1 GHz, MIPS64 with Hardware Acceleration for Packet Processing
System Memory	2 GB DDR3 RAM
On-Board Flash Storage	4 GB
Certifications	CE, FCC, IC
Rackmount	Yes
Operating Temperature	-10 to 45° C (14 to 113° F)
Operating Humidity	10 to 90% Noncondensing

UniFi | SECURITY GATEWAY

Specifications

	UniFi USG
Dimensions	135 x 135 x 28.3 mm (5.32 x 5.32 x 1.11")
Weight	366 g (12.9 oz)
Max. Power Consumption	7W
Power Supply	12VDC, 1A Power Adapter (Included)
Power Input	9 to 24VDC, Supported Voltage Range
LEDs System Serial Console Port Data Ports	 Status Power Speed/Link/Activity
Networking Interfaces Serial Console Port Data Ports	 (1) RJ45 Serial Port (3) 10/100/1000 Ethernet Ports*
Layer 3 Forwarding Performance Packet Size: 64 Bytes Packet Size: 512 Bytes or Larger	 1,000,000 pps 3 Gbps (Line Rate)
Processor	Dual-Core 500 MHz, MIPS64 with Hardware Acceleration for Packet Processing
System Memory	512 MB DDR2 RAM
On-Board Flash Storage	2 GB
Certifications	CE, FCC, IC
Wall-Mountable	Yes
Operating Temperature	-10 to 45° C (14 to 113° F)
Operating Humidity	10 to 90% Noncondensing

* VOIP port is available for port remapping in UniFi v5.

Specifications are subject to change. Ubiquiti products are sold with a limited warranty described at: www.ubnt.com/support/warranty
©2014-2017 Ubiquiti Networks, Inc. All rights reserved. Ubiquiti, Ubiquiti Networks, the Ubiquiti U logo, the Ubiquiti beam logo, and UniFi are trademarks or registered trademarks of Ubiquiti Networks, Inc. in the United States and in other countries. All other trademarks are the property of their respective owners.

www.ubnt.com

DATASHEET

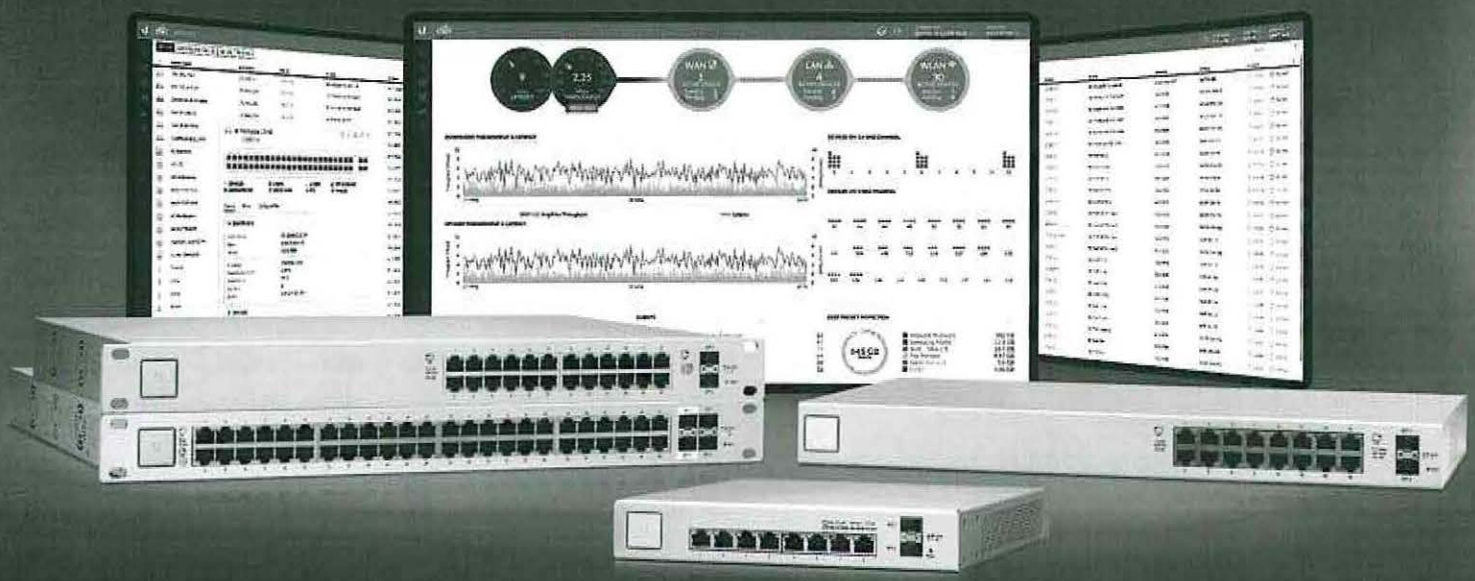

UniFi® | SWITCH

Managed PoE+ Gigabit Switches with SFP

Models: US-8-150W, US-16-150W, US-24-250W, US-24-500W, US-48-500W, US-48-750W

Non-Blocking Throughput Switching Performance

Gigabit Ethernet RJ45 and SFP+/SFP Ports

Auto-Sensing IEEE 802.3af/at PoE

UBIQUITI NETWORKS

UniFi® | SWITCH

Build and expand your network with Ubiquiti Networks® UniFi® Switch, part of the UniFi line of products. The UniFi Switch is a fully managed, PoE+ Gigabit switch, delivering robust performance and intelligent switching for growing networks.

Switching Performance

The UniFi Switch offers the forwarding capacity to simultaneously process traffic on all ports at line rate without any packet loss.

PoE+ Flexibility

The UniFi Switch models are available with 8, 16, 24, or 48 PoE Gigabit Ethernet ports of auto-sensing IEEE 802.3af/at or configurable 24V passive PoE to simplify your infrastructure.

By default, the UniFi Switch automatically detects 802.3af/at devices so they automatically receive PoE. For 24V passive PoE devices, manually enable 24V passive PoE using the UniFi Controller software.

Fiber Connectivity

The UniFi Switch provides fiber connectivity options for easy expansion of your networks. Each UniFi Switch model includes two SFP ports for uplinks of up to 1 Gbps.

Each 48-port model adds two SFP+ ports for high-capacity uplinks of up to 10 Gbps, so you can directly connect to a high-performance storage server or deploy a long-distance uplink to another switch.

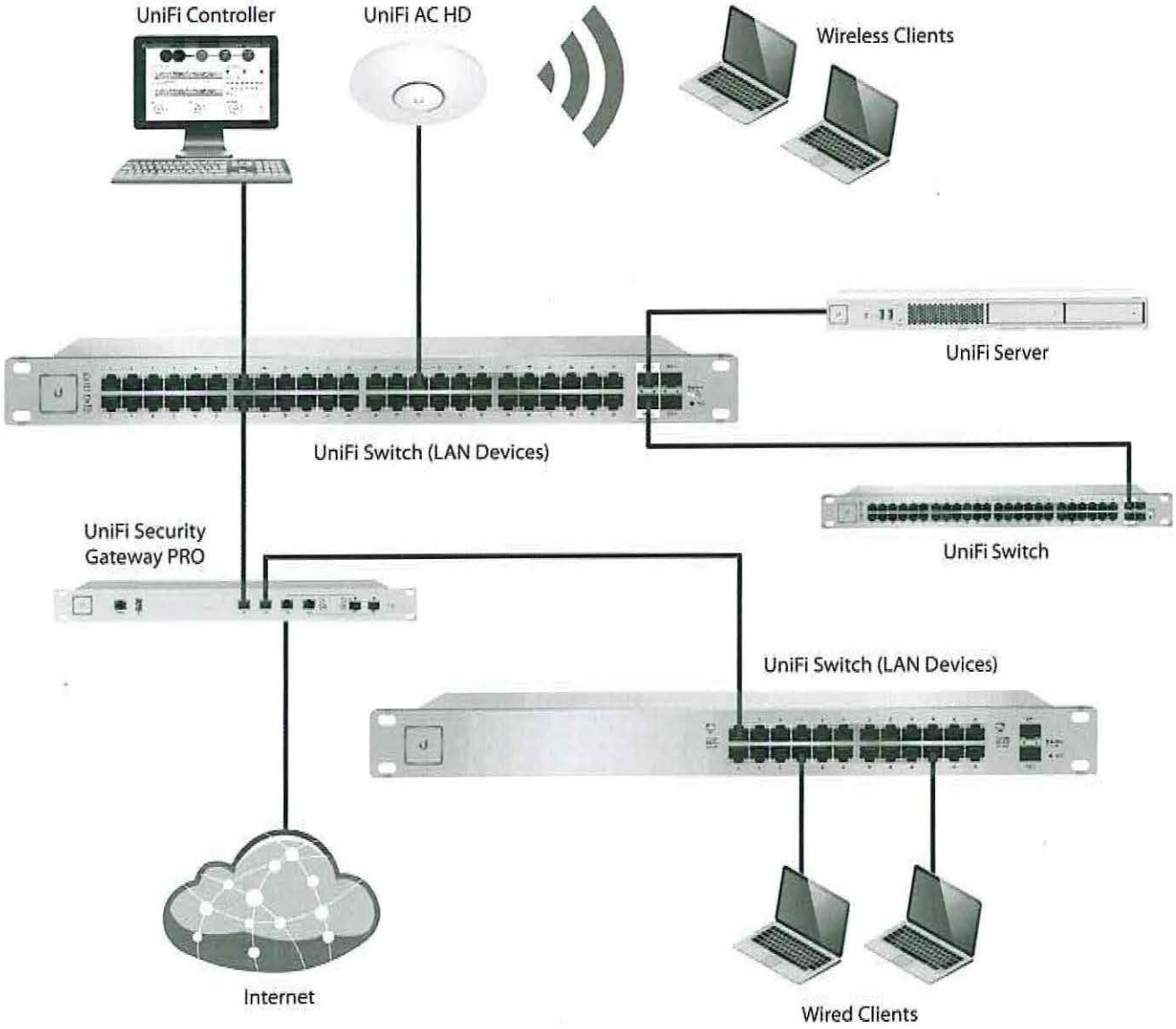

UniFi Controller

Designed for convenient management, the UniFi Controller software allows admins to configure and monitor the UniFi Switch and other UniFi devices using a graphical user interface. You can download the controller from **www.ubnt.com** at no additional charge – there is no separate software, licensing, or support fee.

Multi-Site Management

A single instance of the UniFi Controller running in the cloud can manage multiple UniFi sites within a centralized interface. Each site is logically separated and has its own unique network monitoring, configuration, maps, statistics, and admin accounts.

Switch Configuration

You can access any managed UniFi Switch through the UniFi Controller to configure a variety of features:

- PoE setting per port
- Operation mode (switching, mirroring, or aggregate) per port
- Network/VLAN configuration
- Jumbo frame and flow control configuration
- Network settings
- Storm control setting per port
- Spanning tree configuration

Switch Port Status

You can also view status information for each port:

- Connection speed and duplex mode
- TX/RX data rates
- PoE status
- Network/VLAN setting

Software Features

The UniFi Controller software offers the following features:

- Centralized configuration management (including configuration cloning)
- Auto-MDIX automatically adjusts as needed for straight through or crossover cable
- 802.1X (RADIUS) authentication and dynamic VLAN

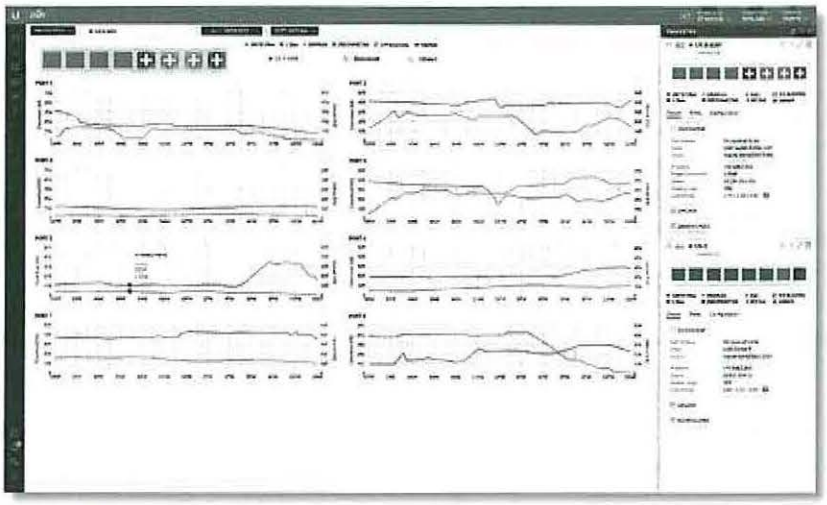

Statistics

The *Switch Statistics* screen displays a graphical overview of all LAN throughput for each port on the selected switch. Under the same pane of glass, it also shows LAN, WLAN, and Internet traffic, including the breakdown of protocols being used (requires a UniFi Security Gateway).

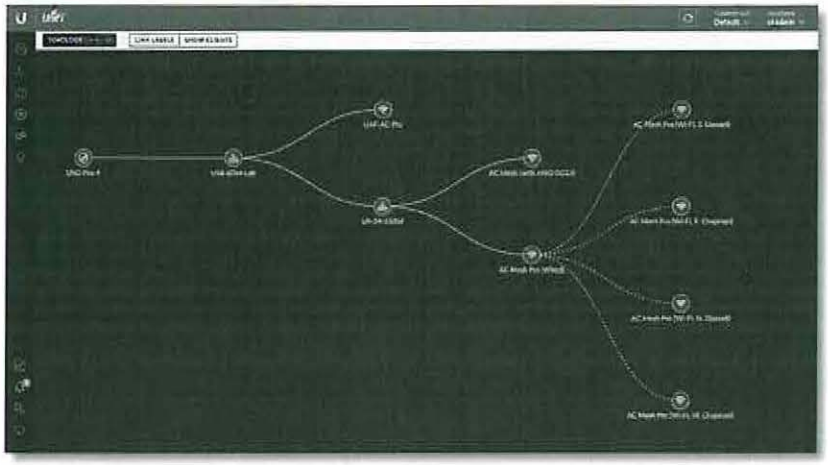

Topology View

The *Topology* screen displays a topology diagram of your UniFi system. You can filter the type of information displayed, such as client devices, labels, and link settings.

- Auto-generated topology view
- Centralized statistics in controller
- RSTP and Spanning Tree Protocol
- SNMP
- Storm control (independent broadcast, multicast, and unknown destination unicast limits per port)
- 802.3x flow control
- 9216-byte jumbo frame support
- VLAN support
- Port mirroring
- Port aggregation (LACP)
- Port isolation (protected port) for port-level isolation

UniFi® | SWITCH

Model: US-8-150W

- (8) Gigabit RJ45 Ports
- (2) SFP Ports
- Non-Blocking Throughput: 10 Gbps
- Switching Capacity: 20 Gbps
- Forwarding Rate: 14.88 Mpps
- Maximum Power Consumption: 150W
- Supports PoE+ IEEE 802.3at/af and 24V Passive PoE
- Quiet, Fanless Operation
- Desktop-Mountable (Do not physically stack the US-8-150W.)

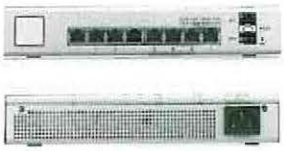

Model: US-16-150W

- (16) Gigabit RJ45 Ports
- (2) SFP Ports
- (1) Serial Console Port
- Non-Blocking Throughput: 18 Gbps
- Switching Capacity: 36 Gbps
- Forwarding Rate: 26.78 Mpps
- Maximum Power Consumption: 150W
- Supports PoE+ IEEE 802.3at/af and 24V Passive PoE
- Rack-Mountable or Wall-Mountable with Rack-Mount Brackets (Included)

Model: US-24-250W

- (24) Gigabit RJ45 Ports
- (2) SFP Ports
- (1) Serial Console Port
- Non-Blocking Throughput: 26 Gbps
- Switching Capacity: 52 Gbps
- Forwarding Rate: 38.69 Mpps
- Maximum Power Consumption: 250W
- Supports PoE+ IEEE 802.3at/af and 24V Passive PoE
- Rack-Mountable

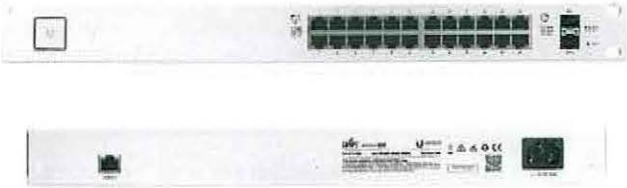

Model: US-24-500W

- (24) Gigabit RJ45 Ports
- (2) SFP Ports
- (1) Serial Console Port
- Non-Blocking Throughput: 26 Gbps
- Switching Capacity: 52 Gbps
- Forwarding Rate: 38.69 Mpps
- Maximum Power Consumption: 500W
- Supports PoE+ IEEE 802.3at/af and 24V Passive PoE
- Rack-Mountable

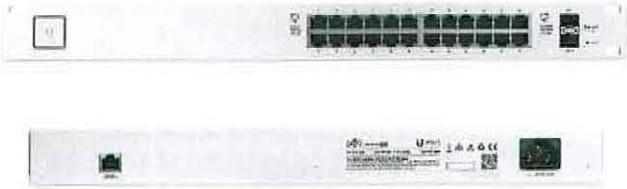

Model: US-48-500W

- (48) Gigabit RJ45 Ports
- (2) SFP+ Ports
- (2) SFP Ports
- (1) Serial Console Port
- Non-Blocking Throughput: 70 Gbps
- Switching Capacity: 140 Gbps
- Forwarding Rate: 104.16 Mpps
- Maximum Power Consumption: 500W
- Supports PoE+ IEEE 802.3at/af and 24V Passive PoE
- Rack-Mountable

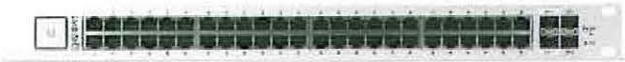

Model: US-48-750W

- (48) Gigabit RJ45 Ports
- (2) SFP+ Ports
- (2) SFP Ports
- (1) Serial Console Port
- Non-Blocking Throughput: 70 Gbps
- Switching Capacity: 140 Gbps
- Forwarding Rate: 104.16 Mpps
- Maximum Power Consumption: 750W
- Supports PoE+ IEEE 802.3at/af and 24V Passive PoE
- Rack-Mountable

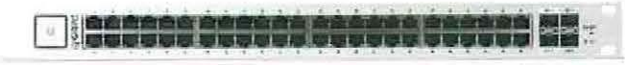

Model Comparison Chart

	US-8	US-8-60W	US-8-150W	US-16-150W	US-24	US-24-250W US-24-500W	US-48	US-48-500W US-48-750W
Gigabit RJ45 Ports	8	8	8	16	24	24	48	48
SFP Ports			2	2	2	2	2	2
SFP+ Ports							2	2
Sound Level* (dBr)	0.7 (fanless)	0.6 (fanless)	0.5 (fanless)	1.7 - 10.8	1.6 - 9.2	9.1 - 21.2 9.3 - 21.6	0.7 - 13.5	10.7 - 23.6 12.1 - 24.7

* Background noise level: 27.5 dBa

Specifications

US-8-150W		
Dimensions	235 x 43 x 204 mm (9.25 x 1.69 x 8.03")	
Weight	1.65 kg (3.67 lb)	
Networking Interfaces	(8) 10/100/1000 Mbps RJ45 Ethernet Ports (2) 1 Gbps SFP Ethernet Ports	
Management Interface	Ethernet In-Band	
Total Non-Blocking Throughput	10 Gbps	
Switching Capacity	20 Gbps	
Forwarding Rate	14.88 Mpps	
MAC Address Table	16384	
Maximum Aggregations	6	
Monitoring Sessions	1	
Maximum VLANs	255	
Power Method	100-240VAC/50-60 Hz, Universal Input	
Power Supply	AC/DC, Internal, 150W DC	
Max. Power Consumption	Including PoE Output	Excluding PoE Output
	150W	20W
LEDs Per Port	RJ45 Data Ports	SFP Data Ports
	PoE, Speed/Link/Activity	Speed/Link/Activity
Sound Level*	0.5 dBr (Fanless)	
ESD/EMP Protection	Air: ± 24 kV, Contact: ± 24 kV	
Shock and Vibration	ETSI300-019-1.4 Standard	
Operating Temperature	-5 to 40° C (23 to 104° F)	
Operating Humidity	5 to 95% Noncondensing	
Certifications	CE, FCC, IC	

* Background noise level: 27.5 dBa

PoE+ Per Port	
PoE Interfaces	PoE+ IEEE 802.3af/at (Pins 1, 2+; 3, 6-) 24VDC Passive PoE (Pins 4, 5+; 7, 8-)
Max. PoE+ Wattage per Port by PSE	34.2W
Voltage Range 802.3at Mode	50–57V
Max. Passive PoE Wattage per Port	17W
24V Passive PoE Voltage Range	20-27V

Specifications

US-16-150W		
Dimensions	443 x 43 x 221 mm (17.44 x 1.69 x 8.70")	
Weight	Rack-Mount Brackets Excluded	Rack-Mount Brackets Included
	2.80 kg (6.17 lb)	2.89 kg (6.37 lb)
Networking Interfaces	(16) 10/100/1000 Mbps RJ45 Ethernet Ports (2) 1 Gbps SFP Ethernet Ports	
Management Interface	Ethernet In-Band	
Total Non-Blocking Throughput	18 Gbps	
Switching Capacity	36 Gbps	
Forwarding Rate	26.78 Mpps	
MAC Address Table	16384	
Maximum Aggregations	6	
Monitoring Sessions	1	
Maximum VLANs	255	
Power Method	100-240VAC/50-60 Hz, Universal Input	
Power Supply	AC/DC, Internal, 150W DC	
Max. Power Consumption	Including PoE Output	Excluding PoE Output
	150W	28W
LEDs Per Port	RJ45 Data Ports	SFP Data Ports
	PoE, Speed/Link/Activity	Speed/Link/Activity
Sound Level*	Fan Level: 0	Fan Level: 1, 2, 3
	1.7 dBr	10.8 dBr
ESD/EMP Protection	Air: ± 24 kV, Contact: ± 24 kV	
Shock and Vibration	ETSI300-019-1.4 Standard	
Operating Temperature	-5 to 40° C (23 to 104° F)	
Operating Humidity	5 to 95% Noncondensing	
Certifications	CE, FCC, IC	

* Background noise level: 27.5 dBa

PoE+ Per Port	
PoE Interfaces	PoE+ IEEE 802.3af/at (Pins 1, 2+; 3, 6-) 24VDC Passive PoE (Pins 4, 5+; 7, 8-)
Max. PoE+ Wattage per Port by PSE	34.2W
Voltage Range 802.3at Mode	50–57V
Max. Passive PoE Wattage per Port	17W
24V Passive PoE Voltage Range	20-27V

Specifications

US-24-250W				
Dimensions	485 x 43.7 x 285.4 mm (19.09 x 1.72 x 11.24")			
Weight	4.7 kg (10.4 lb)			
Networking Interfaces	(24) 10/100/1000 Mbps RJ45 Ethernet Ports (2) 1 Gbps SFP Ethernet Ports			
Management Interface	(1) RJ45 Serial Port Out-of-Band, Ethernet In-Band			
Total Non-Blocking Throughput	26 Gbps			
Switching Capacity	52 Gbps			
Forwarding Rate	38.69 Mpps			
MAC Address Table	16384			
Maximum Aggregations	6			
Monitoring Sessions	1			
Maximum VLANs	255			
Power Method	100-240VAC/50-60 Hz, Universal Input			
Power Supply	AC/DC, Internal, 250W DC			
Max. Power Consumption	Including PoE Output		Excluding PoE Output	
	250W		30W	
LEDs Per Port	RJ45 Data Ports		SFP Data Ports	
	PoE, Speed/Link/Activity		Speed/Link/Activity	
Sound Level*	Fan Level 0	Fan Level 1	Fan Level 2	Fan Level 3
	9.1 dBr	14.2 dBr	16.8 dBr	21.2 dBr
ESD/EMP Protection	Air: ± 24 kV, Contact: ± 24 kV			
Shock and Vibration	ETSI300-019-1.4 Standard			
Operating Temperature	-5 to 40° C (23 to 104° F)			
Operating Humidity	5 to 95% Noncondensing			
Certifications	CE, FCC, IC			

* Background noise level: 27.5 dBa

PoE+ Per Port	
PoE Interfaces	PoE+ IEEE 802.3af/at (Pins 1, 2+; 3, 6-) 24VDC Passive PoE (Pins 4, 5+; 7, 8-)
Max. PoE+ Wattage per Port by PSE	34.2W
Voltage Range 802.3at Mode	50–57V
Max. Passive PoE Wattage per Port	17W
24V Passive PoE Voltage Range	20-27V

Specifications

US-24-500W				
Dimensions	485 x 43.7 x 285.4 mm (19.09 x 1.72 x 11.24")			
Weight	4.8 kg (10.6 lb)			
Networking Interfaces	(24) 10/100/1000 Mbps RJ45 Ethernet Ports (2) 1 Gbps SFP Ethernet Ports			
Management Interface	(1) RJ45 Serial Port Out-of-Band, Ethernet In-Band			
Total Non-Blocking Throughput	26 Gbps			
Switching Capacity	52 Gbps			
Forwarding Rate	38.69 Mpps			
MAC Address Table	16384			
Maximum Aggregations	6			
Monitoring Sessions	1			
Maximum VLANs	255			
Power Method	100-240VAC/50-60 Hz, Universal Input			
Power Supply	AC/DC, Internal, 500W DC			
Max. Power Consumption	Including PoE Output		Excluding PoE Output	
	500W		30W	
LEDs Per Port	RJ45 Data Ports		SFP Data Ports	
	PoE, Speed/Link/Activity		Speed/Link/Activity	
Sound Level*	Fan Level 0	Fan Level 1	Fan Level 2	Fan Level 3
	9.3 dBr	15.2 dBr	17.9 dBr	21.6 dBr
ESD/EMP Protection	Air: ± 24 kV, Contact: ± 24 kV			
Shock and Vibration	ETSI300-019-1.4 Standard			
Operating Temperature	-5 to 40° C (23 to 104° F)			
Operating Humidity	5 to 95% Noncondensing			
Certifications	CE, FCC, IC			

* Background noise level: 27.5 dBa

PoE+ Per Port	
PoE Interfaces	PoE+ IEEE 802.3af/at (Pins 1, 2+; 3, 6-) 24VDC Passive PoE (Pins 4, 5+; 7, 8-)
Max. PoE+ Wattage per Port by PSE	34.2W
Voltage Range 802.3at Mode	50–57V
Max. Passive PoE Wattage per Port	17W
24V Passive PoE Voltage Range	20-27V

Specifications

US-48-500W				
Dimensions	485 x 43.7 x 374.6 mm (19.09 x 1.72 x 14.75")			
Weight	6.1 kg (13.5 lb)			
Networking Interfaces	(48) 10/100/1000 Mbps RJ45 Ethernet Ports (2) 1/10 Gbps SFP+ Ethernet Ports (2) 1 Gbps SFP Ethernet Ports			
Management Interface	(1) RJ45 Serial Port Out-of-Band, Ethernet In-Band			
Total Non-Blocking Throughput	70 Gbps			
Switching Capacity	140 Gbps			
Forwarding Rate	104.16 Mpps			
MAC Address Table	16384			
Maximum Aggregations	6			
Monitoring Sessions	1			
Maximum VLANs	255			
Power Method	100-240VAC/50-60 Hz, Universal Input			
Power Supply	AC/DC, Internal, 500W DC			
Max. Power Consumption	Including PoE Output		Excluding PoE Output	
	500W		64W	
LEDs Per Port	RJ45 Data Ports		SFP Data Ports	
	PoE, Speed/Link/Activity		Speed/Link/Activity	
Sound Level*	Fan Level 0	Fan Level 1	Fan Level 2	Fan Level 3
	10.7 dBr	16.2 dBr	19.3 dBr	23.6 dBr
ESD/EMP Protection	Air: ± 24 kV, Contact: ± 24 kV			
Shock and Vibration	ETSI300-019-1.4 Standard			
Operating Temperature	-5 to 40° C (23 to 104° F)			
Operating Humidity	5 to 95% Noncondensing			
Certifications	CE, FCC, IC			

* Background noise level: 27.5 dBa

PoE+ Per Port	
PoE Interfaces	PoE+ IEEE 802.3af/at (Pins 1, 2+; 3, 6-) 24VDC Passive PoE (Pins 4, 5+; 7, 8-)
Max. PoE+ Wattage per Port by PSE	34.2W
Voltage Range 802.3at Mode	50–57V
Max. Passive PoE Wattage per Port	17W
24V Passive PoE Voltage Range	20-27V

Specifications

US-48-750W				
Dimensions	485 x 43.7 x 374.6 mm (19.09 x 1.72 x 14.75")			
Weight	6.5 kg (14.3 lb)			
Networking Interfaces	(48) 10/100/1000 Mbps RJ45 Ethernet Ports (2) 1/10 Gbps SFP+ Ethernet Ports (2) 1 Gbps SFP Ethernet Ports			
Management Interface	(1) RJ45 Serial Port Out-of-Band, Ethernet In-Band			
Total Non-Blocking Throughput	70 Gbps			
Switching Capacity	140 Gbps			
Forwarding Rate	104.16 Mpps			
MAC Address Table	16384			
Maximum Aggregations	6			
Monitoring Sessions	1			
Maximum VLANs	255			
Power Method	100-240VAC/50-60 Hz, Universal Input			
Power Supply	AC/DC, Internal, 750W DC			
Max. Power Consumption	Including PoE Output		Excluding PoE Output	
	750W		64W	
LEDs Per Port	RJ45 Data Ports		SFP Data Ports	
	PoE, Speed/Link/Activity		Speed/Link/Activity	
Sound Level*	Fan Level 0	Fan Level 1	Fan Level 2	Fan Level 3
	12.1 dBr	18.1 dBr	21.6 dBr	24.7 dBr
ESD/EMP Protection	Air: ± 24 kV, Contact: ± 24 kV			
Shock and Vibration	ETSI300-019-1.4 Standard			
Operating Temperature	-5 to 40° C (23 to 104° F)			
Operating Humidity	5 to 95% Noncondensing			
Certifications	CE, FCC, IC			

* Background noise level: 27.5 dBa

PoE+ Per Port	
PoE Interfaces	PoE+ IEEE 802.3af/at (Pins 1, 2+; 3, 6-) 24VDC Passive PoE (Pins 4, 5+; 7, 8-)
Max. PoE+ Wattage per Port by PSE	34.2W
Voltage Range 802.3at Mode	50–57V
Max. Passive PoE Wattage per Port	17W
24V Passive PoE Voltage Range	20-27V

UniFi AP and Video Camera Compatibility

The UniFi Switch is compatible with UniFi Access Points and UniFi G3 Video Cameras, as detailed below.

AP/Camera Model	US-8	US-8-60W	US-8-150W	US-16-150W	US-24-250W	US-24-500W	US-48-500W	US-48-750W
UVC-G3			✓	✓	✓	✓	✓	✓
UVC-G3-AF	✓	✓	✓	✓	✓	✓	✓	✓
UVC-G3-DOME	✓	✓	✓	✓	✓	✓	✓	✓
UVC-G3-FLEX	✓	✓	✓	✓	✓	✓	✓	✓
UVC-G3-PRO	✓	✓	✓	✓	✓	✓	✓	✓
UAP			✓	✓	✓	✓	✓	✓
UAP-LR			✓	✓	✓	✓	✓	✓
UAP-PRO	✓	✓	✓	✓	✓	✓	✓	✓
UAP-AC-LITE [1]	✓	✓	✓	✓	✓	✓	✓	✓
UAP-AC-LR [1]	✓	✓	✓	✓	✓	✓	✓	✓
UAP-AC-PRO	✓	✓	✓	✓	✓	✓	✓	✓
UAP-AC-M	✓	✓	✓	✓	✓	✓	✓	✓
UAP-AC-M-PRO	✓	✓	✓	✓	✓	✓	✓	✓
UAP-AC-IW [2]	✓	✓	✓	✓	✓	✓	✓	✓
UAP-AC-IW-PRO [2]	✓	✓	✓	✓	✓	✓	✓	✓
UAP-AC-HD	–	–	✓	✓	✓	✓	✓	✓

✓ Compatible with the UniFi switch

Requires Instant 802.3af Gigabit PoE Converter: INS-3AF-I-G or INS-3AF-O-G

Notes:

[1] UAP-AC-LITE and UAP-AC-LR models manufactured before September 2016 require the Instant 802.3af Gigabit PoE Converter.

[2] For the UAP-AC-IW and UAP-AC-IW-PRO, PoE passthrough is supported by all of the switches listed above except for models US-8 and US-8-60W.

Related Product Datasheets

UniFi Switch 8, UniFi Switch 8-60W:

dl.ubnt.com/datasheets/unifi/UniFi_Switch_8_DS.pdf

UniFi AC APs:

dl.ubnt.com/datasheets/unifi/UniFi_AC_APs_DS.pdf

UniFi G3 Video Cameras:

dl.ubnt.com/datasheets/unifi/UniFi_Video_G3_DS.pdf

Specifications are subject to change. Ubiquiti products are sold with a limited warranty described at: www.ubnt.com/support/warranty
©2014-2018 Ubiquiti Networks, Inc. All rights reserved. Ubiquiti, Ubiquiti Networks, the Ubiquiti U logo, the Ubiquiti beam logo, and UniFi are trademarks or registered trademarks of Ubiquiti Networks, Inc. in the United States and in other countries. All other trademarks are the property of their respective owners.

www.ubnt.com

BCDVideo™

5 YEAR WARRANTY FEATURES

Unmatched Data Protection and Tech Support

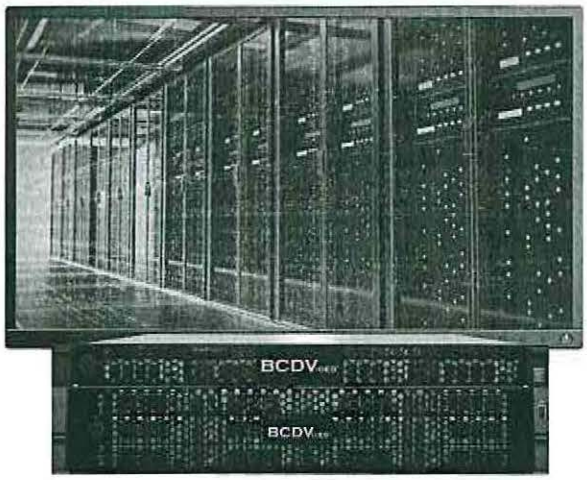

BCDVideo Offers Industry Leading Warranties, including a 5 Year Product, Global On-Site Next Business Day, Keep Your Hard Drive Warranty to provide the peace of mind needed, knowing that every piece of BCDVideo equipment will be properly serviced and taken care of. Features include 24/7, next business day, on-site support, as well as a Keep Your Hard Drive feature and lifetime technical support. (For long term projects, this warranty can be upgraded to a 7-year period for extended protection and service.) Most standard warranties don't allow for users to keep a failed drive, putting critical data at risk. The keep Your Hard Drive warranty feature provides an extra level of adata security with no added cost.

KEY BENEFITS

With 24/7 next business day support, both remote and on-site support by certified technicians will be available to service and support your BCDVideo product. In addition to a full hardware warranty, BCDVideo also offers a Keep Your Hard Drive feature to give customers of any size complete control over their data and hard drive. While still possible to return your drive, the Keep Your Hard Drive warranty waives the requirement to return failed drives.

Additional Features:

- **Greater Security** – Your sensitive data and hard drive never have to leave your control. Tracking failed hard drives in-transit becomes a non-issue. Covers multiple drives in a system and multiple failures.
- **Compliance Enablement** – Help comply with current data privacy regulations and internal company policies by ensuring sensitive information on your hard drives is not compromised.
- **Risk Mitigation** – Proper control/disposition of sensitive data can mitigate the risk of expensive civil liability by helping to prevent potential exposure of confidential customer data or intellectual property.

Products with a 5 year, Global On-Site, Next Business Day, Keep Your Hard Drive Warranty:

- **Apollo Server Series** – Enterprise grade IP Video Servers Purpose-built to guarantee the highest level performance. Video optimized features include 12G dual port SAS drives, dual SSD for operating system, mission-critical RAID5/6 disk protection, redundant power, and the latest Intel processors.
- **Neptune Server Series** - Professional grade IP Video Servers with enterprise features. Video surveillance grade hard drives enable high performance and reliability, combined with the latest Intel processors create highly effective, powerful, and affordable IP video solutions.
- **Gemini Workstations** – Enterprise grade video workstations Purpose-built to exceed industry standards. GPU accelerated hardware enbaled by cutting edge Nvidia GPUs, combined with the latest Intel processors and the latest hardware creates maximum performance.

For more information about BCDVideo's range of warranty features, reach out to your sales representative, or contact us at sales@bcdvideo.com

— POWERED BY —
DELL EMC

FOR MORE INFORMATION: bcdvideo.com | sales@bcdvideo.com | +1.847.205.1922 **TECH SUPPORT:** support@bcdvideo.com | +1.844.462.2384

Copyright © 2018, BCDVideo. All rights reserved. This document is provided for information purposes only. The contents are subject to change without notice.

City of Torrington

Department of Police Services

William R. Baldwin Jr.
Chief of Police

Proudly Serving
Since 1888

Chief William R. Baldwin Jr.
Torrington Police Department
576 Main Street
Torrington, Connecticut 06790

May 01, 2020

Honorable Mayor Elinor Carbone,
Members of Board of Public Safety,
Members of the Board of Finance
Members of the City Counsel,

I have reviewed the recommendation letter submitted by Stephen Bukoski of Safer Places Inc. and agree with his recommendation of awarding Mammoth Security the security camera project, proposal #1 at police department headquarters only in the amount of $94,544.38.

Safer Places Inc. was hired as a consultant to develop a security camera system for the police department that included the Winthrop St., property which includes the traffic division facility and evidence impound yard. Mammoth Security reviewed the bid proposals and will oversee the project.

Based on their recommendation I feel we should move forward with this project and award the contract to Mammoth Security Inc. for purposes of installing and upgrading our security camera system at police headquarters only, located at 576 Main St. The Winthrop St. proposal (proposal #2) will be tabled for a future project. Thank you.

Respectfully Submitted,

William R Baldwin Jr.
Chief of Police
Torrington Police Department

5/1/2020 12:38 PM
RECEIVED FOR RECORD
TORRINGTON TOWN CLERK

Tel. (860) 489-2000 or (860) 489-2068 FAX (860) 482-0125
Torrington Police Department, 576 Main Street, Torrington, Connecticut 06790
An Equal Opportunity Employer