SOIL EROSION & SEDIMENT CONTROL PLAN NARRATIVE

INTRODUCTION:

PURSUANT TO CONNECTICUT P.A. 83–388, A SOIL EROSION AND SEDIMENT CONTROL PLAN AND NARRATIVE IS REQUIRED FOR THIS PROJECT.

THIS NARRATIVE DESCRIBES MEASURES REQUIRED TO CONTROL SOIL EROSION DURING AND AFTER CONSTRUCTION OF THE PROPOSED SITE WORK SHOWN ON THIS PLAN. THE SOIL EROSION AND SEDIMENT CONTROL MEASURES SHOWN ON THIS PLAN ARE DESIGNED IN ACCORDANCE WITH A DOCUMENT ENTITLED "2002 CONNECTICUT GUIDELINES FOR SOIL EROSION AND SEDIMENT CONTROL," PUBLISHED BY THE CONNECTICUT COUNCIL ON SOIL AND WATER CONSERVATION IN COOPERATION WITH THE CT DEP.

THE GUIDELINES ARE OBTAINABLE FROM CONNECTICUT'S DEPARTMENT OF ENERGY AND ENVIRONMENTAL PROTECTION AT THE FOLLOWING WEB ADDRESS:
https: //portal.ct.gov/DEEP/Water/Soil–Erosion–and–Sediment–Control–Guidelines/Guidelines–for–Soil–Erosion–and–Sediment–Control, AND SHOULD BE USED AS A REFERENCE IN CONSTRUCTING THE EROSION AND SEDIMENT CONTROLS INDICATED ON THESE PLANS.

PROJECT DESCRIPTION:

THE APPLICANT PROPOSES TO CONSTRUCT A 2,550 (±) SQUARE FOOT ADDITION WITH APPURTENANT PARKING. THE BUILDING WILL BE SERVED BY PUBLIC SEWER/WATER
THE SITE IS LOCATED AT 2033 EAST MAIN STREET, TORRINGTON, CT.

RUN OFF FROM THE DEVELOPED SITE WILL BE COLLECTED IN CATCH BASINS AND PIPED TO AN ON–SITE DETENTION BASIN, WHICH WILL OUTLET INTO EXISTING WETLANDS. RIPRAP WILL BE INSTALLED AT ALL PIPE OUTLETS TO MINIMIZE SOIL EROSION.

ANTICIPATED START OF CONSTRUCTION IS SPRING OF 2023 . SEDIMENT AND EROSION CONTROL MEASURES WILL BE IMPLEMENTED AND WILL BE IN PROPER WORKING ORDER BEFORE CONSTRUCTION BEGINS. SEDIMENT AND EROSION MEASURES WILL BE MAINTAINED IN PROPER WORKING ORDER THROUGH COMPLETION OF CONSTRUCTION AND WILL REMAIN IN PLACE AND CONTINUE TO BE MAINTAINED AFTER CONSTRUCTION HAS BEEN COMPLETED, UNTIL ALL DISTURBED AREAS ARE STABILIZED.

CONSTRUCTION SCHEDULE:

1. OBTAIN A COPY OF ALL PROJECT LAND–USE PERMITS. THE CONTRACTOR SHALL BE FAMILIAR WITH ALL PERMIT REQUIREMENTS PRIOR TO COMMENCEMENT OF CONSTRUCTION.
2. INSTALL SILTATION CONTROL FENCES AND FILTER FABRIC SILT BARRIERS AT EXISTING CATCH BASINS.
3. INSTALL CONSTRUCTION ENTRANCE.
4. REMOVE TREES, BRUSH, AND STUMPS IN AREAS TO BE CLEARED AS REQUIRED.
5. STRIP TOPSOIL FROM WORK AREAS, STOCKPILE AND INSTALL SILT FENCE AT TOE OF PILE.
6. ROUGH GRADE DETENTION BASIN.
7. ROUGH GRADE SITE, BEGIN CONSTRUCTION OF BUILDING.
8. INSTALL UTILITIES AND FILTER FABRIC SILT BARRIERS AT NEW CATCH BASINS.
9. BACKFILL FOUNDATION.
10. ROUGH GRADE NEW PARKING AREAS, INSTALL AND GRADE PAVEMENT BASE AND CURBS.
11. PAVE PARKING AREAS AND INSTALL WALKS.
12. GRADE, STABILIZE AND SEED ALL DISTURBED AREAS.
13. MAINTAIN ALL EROSION CONTROL MEASURES UNTIL A DURABLE GRASS STAND IS ESTABLISHED IN ALL NON–PAVED AREAS.

LAND DISTURBANCE:

THE FOLLOWING PROCEDURES SHALL BE USED FOR ALL LAND DISTURBING ACTIVITIES:

1. ALL AREAS SHALL REMAIN UNDISTURBED UNTIL IMMEDIATELY PRIOR TO PROPOSED CONSTRUCTION ACTIVITIES.
2. LAND CLEARING SHALL PROCEED AT THE SAME RATE AS CONSTRUCTION.
3. REMOVAL OF VEGETATION SHALL BE RESTRICTED TO THOSE AREAS NECESSARY FOR CURRENT CONSTRUCTION ACTIVITIES.
4. DISTURBED AREAS SHALL BE LIMITED TO A MAXIMUM OF 20 FEET BEYOND THE PHYSICAL DIMENSIONS OF THE ROADS, DRIVEWAYS, UTILITY TRENCHES, SEPTIC SYSTEMS, AND AREAS TO BE GRADED.
5. CONSTRUCTION EQUIPMENT AND MATERIALS SHALL BE CONFINED TO THE DISTURBED AREAS ONLY.
6. THE DEVELOPER SHALL BE RESPONSIBLE FOR THE CLEANING OF NEARBY STREETS, AS ORDERED BY THE TOWN OR STATE, OF ANY DEBRIS FROM HIS CONSTRUCTION ACTIVITIES.
7. THE USE, STORAGE, OR DISPOSAL OF ANY MATERIAL NOT IN ACCORDANCE WITH WHAT IS SHOWN ON THE APPROVED PLAN OR REQUIRED BY THE REGULATORY AGENCY MAY RESULT IN THE IMMEDIATE REVOCATION OF ANY PERMIT/APPROVAL GRANTED BY THE COMMISSION.

GENERAL NOTES:

WHENEVER CONSTRUCTION SHALL TAKE PLACE IN AREAS DESIGNATED AS WETLANDS OR AS AREAS TO BE ECOLOGICALLY PROTECTED, THE CONTRACTOR SHALL TAKE SPECIAL CARE WITH HIS CONSTRUCTION METHODS AND SHALL COMPLY WITH THE FOLLOWING REGULATIONS:
THE DIVERSION OF WATERCOURSES SHALL BE CONDUCTED IN SUCH A MANNER AS TO PREVENT INJURY TO PERSONS OR PUBLIC HEALTH AND TO PREVENT FLOODING OF PUBLIC OR PRIVATE PROPERTY.
ALL EXISTING VEGETATION SHALL BE PROTECTED, AND ONLY THAT CLEARING AND CUTTING WHICH IS ABSOLUTELY NECESSARY FOR THE PROPOSED CONSTRUCTION OR TO CLEAR THE PERMANENT RIGHT–OF–WAY SHALL BE ALLOWED. CARE SHALL BE TAKEN TO PRESERVE ALL SPECIMEN TREES. THOSE TREES IDENTIFIED TO BE SAVED SHALL BE PROTECTED FROM DAMAGE BY CONSTRUCTION EQUIPMENT BY SUITABLE MEANS.
ALL REGULATED AREAS SHALL BE RESTORED TO THEIR ORIGINAL CONDITION AND CONTOURS.
EXCESS EXCAVATED MATERIAL, INCLUDING THAT RESULTING FROM CLEARING AND GRUBBING, SHALL NOT BE DEPOSITED WITHIN THE REGULATED AREA.

WORK WITHIN REGULATED AREAS:

IF WORK IS REQUIRED WITHIN A REGULATED WETLAND, WATER COURSE, OR ADJACENT AREA, SITE DISTURBANCE SHALL BE LIMITED TO THE AREA ABSOLUTELY NECESSARY FOR CONSTRUCTION. DISTURBED AREAS SHALL BE RESTORED AS CLOSELY AS POSSIBLE TO THEIR ORIGINAL NATURAL STATE. THE DEVELOPER SHALL OBTAIN THE NECESSARY PERMIT(S) FROM THE TOWN WETLANDS COMMISSION. THE CONTRACTOR SHALL FAMILIARIZE HIMSELF WITH THE PERMIT, MAPS APPROVED BY THE TOWN INDICATING THE LIMITS OF INLAND WETLANDS, AND CONDITIONS FOR CONSTRUCTION WITHIN THESE REGULATED AREAS. THE CONTRACTOR SHALL BE REQUIRED TO STRICTLY ADHERE TO ALL REQUIREMENTS AND RESTRICTIONS IMPOSED BY THE WETLANDS PERMIT.

SOIL EROSION AND SEDIMENT CONTROL MEASURES:

ALL WATERCOURSES SHALL BE PROTECTED FROM SEDIMENTATION BOTH DURING AND AFTER CONSTRUCTION. THIS PROVISION APPLIES PARTICULARLY TO DEWATERING ACTIVITIES, STORAGE OF EXCAVATED OR STOCKPILED MATERIAL, AND TRENCH OR DITCH EXCAVATION.
HAYBALES OR SYNTHETIC FILTER BARRIER FENCE, AS SPECIFIED, IS TO BE INSTALLED AT ALL LOCATIONS AS INDICATED ON THE PLANS TO INTERCEPT SILT AND SEDIMENT BEFORE IT REACHES THE DRAINAGE SYSTEM, WETLANDS, OR WATER COURSES. HAYBALES OR SILT FENCE SHALL BE STAKED AS SHOWN ON THE PLAN, AND ARE TO BE REPLACED AS NECESSARY TO PROVIDE PROPER FILTERING ACTION. DEPOSITS OF SEDIMENT AND SILT ARE TO BE PERIODICALLY REMOVED FROM THE UPSTREAM SIDE OF THE HAYBALES OR SILT FENCE. THIS MATERIAL IS TO BE SPREAD AND STABILIZED IN AREAS NOT SUBJECT TO EROSION, OR TO BE USED AS FILL IN AREAS WHICH ARE NOT TO BE PAVED OR BUILT UPON. HAYBALES AND SILT FENCES ARE TO REMAIN IN PLACE AND BE MAINTAINED TO INSURE EFFICIENT SILTATION CONTROL UNTIL ALL AREAS ABOVE THE FENCES ARE STABILIZED AND VEGETATION HAS BEEN ESTABLISHED.
DURING CONSTRUCTION, EXPOSE AS SMALL AN AREA AS POSSIBLE FOR AS SHORT A TIME AS POSSIBLE.
DURING CONSTRUCTION, ANY ADDITIONAL SEDIMENT/EROSION CONTROL MEASURES DEEMED NECESSARY BY THE TOWN SHALL BE IMPLEMENTED BY THE DEVELOPER. IN ADDITION, THE DEVELOPER SHALL BE RESPONSIBLE FOR THE REPAIR, REPLACEMENT, AND MAINTENANCE OF ALL SEDIMENT/EROSION CONTROL MEASURES UNTIL ALL DISTURBED AREAS ARE STABILIZED TO THE SATISFACTION OF THE TOWN.

STRIPPING AND STOCKPILING:

STOCKPILES THAT CONSIST OF ERODIBLE MATERIAL, SUCH AS STRIPPED TOPSOIL, ROAD FILL, SOILS EXCAVATED FROM ROAD CUTS AND FOUNDATION HOLES, ETC., SHALL CONFORM TO THE FOLLOWING CRITERIA:

1. LOCATION–ALL STOCKPILES SHALL BE LOCATED WITHIN THE AREA OF THE PROPOSED DISTURBANCE AND AWAY FROM THE FOLLOWING:
   –WETLANDS
   –WATER CONVEYANCE CHANNELS
   –STORM DRAINAGE SYSTEM INLETS
   –TOP OF STEEP SLOPES
2. SEDIMENT CONTROL–ALL STOCKPILES SHALL BE SURROUNDED BY SEDIMENT BARRIERS, EITHER GEOTEXTILE SILT FENCE OR HAY BALE BARRIERS, PLACED APPROXIMATELY TEN FEET (10') FROM THE TOE OF SLOPE. THE SIDE SLOPES OF ERODIBLE STOCKPILED MATERIAL SHOULD BE NO STEEPER THAN 2:1. STOCKPILED MATERIAL NOT TO BE USED WITHIN THIRTY DAYS SHALL BE SEEDED AND MULCHED IMMEDIATELY AFTER FORMATION OF THE STOCKPILE.

THE CONTRACTOR SHALL CAREFULLY STRIP ALL TOPSOIL, LOAM, OR ORGANIC MATERIAL PRIOR TO TRENCHING OPERATIONS, AND SHALL STORE THEM SEPARATELY FROM ALL OTHER MATERIALS DURING EXCAVATION. IN AREAS DESIGNATED AS INLAND WETLANDS, THE UPPER STRATA, TO A DEPTH OF 2 FEET, SHALL BE STRIPPED AND STORED SEPARATELY. DURING BACKFILLING, THESE MATERIALS SHALL BE REPLACED AND FINISHED AS THEY EXISTED PRIOR TO THE START OF CONSTRUCTION.
THE CONTRACTOR SHALL NOT INTRODUCE ANY FILL MATERIALS INTO ANY AREAS DESIGNATED AS INLAND WETLANDS WITHOUT FIRST OBTAINING A PERMIT(S) FROM THE TOWN WETLANDS COMMISSION.
THE CONTRACTOR SHALL MAINTAIN ALL BACKFILLED EXCAVATION IN PROPER CONDITION UNTIL EXPIRATION OF THE MAINTENANCE PERIOD. ALL DEPRESSIONS APPEARING IN THE BACKFILLED EXCAVATION SHALL BE PROPERLY FILLED AND RESEEDED IF NECESSARY.

RIPRAP:

RIPRAP, IF SPECIFIED, IS TO BE INSTALLED FOR ENERGY DISSIPATION AND TO CONTROL EROSION. THE RIPRAP IS TO BE INSTALLED BEFORE THE OUTLET STRUCTURES ARE WORKING, AND ALL ADJACENT AREAS ARE TO BE IMMEDIATELY SEEDED, IF IN SEASON, OR THE SOIL IS TO BE STABILIZED BY OTHER METHODS. THIS MAY REQUIRE SODDING, MULCHING, OR OTHER METHODS AS DEFINED IN THE "GUIDELINES".
RIPRAP SHALL BE INSPECTED PERIODICALLY TO DETERMINE IF HIGH FLOWS HAVE CAUSED SCOUR BENEATH THE RIPRAP OR FILTER BLANKET, OR DISLODGED ANY OF THE RIPRAP OR FILTER BLANKET MATERIALS. REPAIR IMMEDIATELY UPON OBSERVED FAILURE.

DISPOSAL OF TREES AND BRUSH:

ALL VEGETATION REQUIRING REMOVAL FOR CONSTRUCTION OF THE PROJECT SHALL BE DISPOSED OF OFF–SITE. NO TREES, BRUSH, OR STUMPS SHALL BE BURIED OR OTHERWISE DISPOSED OF ON–SITE.

TRENCH EXCAVATION AND BACKFILL:

CARE SHALL BE TAKEN TO EXCAVATE TO THE CORRECT LINE AND GRADE AND WIDTH AT ALL POINTS. THE METHODS AND EQUIPMENT USED FOR EXCAVATION MUST BE ADAPTED TO THE CONDITIONS AT THE SITE AND THE DIMENSIONS OF THE REQUIRED TRENCH. THE WIDTH OF THE GROUND OR STREET SURFACE, CUT OR DISTURBED, SHALL BE KEPT AS SMALL AS PRACTICABLE TO ACCOMMODATE THE WORK.
TRENCH EXCAVATION, BELOW THE TWO FOOT DEPTH WHICH IS TO BE STRIPPED AND STORED SEPARATELY, SHALL BE STOCKPILED AND USED AS THE TRENCH BACKFILL MATERIAL, UNLESS THE ENGINEER DECLARES IT UNSUITABLE FOR BACKFILL MATERIAL. EXCESS EXCAVATED MATERIAL SHALL BE DISPOSED OF BY THE CONTRACTOR.

ESTABLISH VEGETATION COVER ON DISTURBED AREAS:

1. SCARIFY SURFACE OF ALL AREAS TO BE TOPSOILED; PLACE A MINIMUM OF 4" TOPSOIL ON ALL AREAS TO BE SEEDED.
2. FERTILIZE AT THE FOLLOWING RATES:
   a) FOR SPRING SEEDING, APPLY 19–19–19 FERTILIZER AT A RATE OF 10 LB.s/1000 SF AND WORK INTO SOIL. SIX TO EIGHT WEEKS LATER AN ADDITIONAL 10 LB.s/1000 SF IS TO BE APPLIED.
   b) FOR FALL SEEDING, APPLY 19–19–19 FERTILIZER AT A RATE OF 10 LB.s/1000 SF AND WORK INTO SOIL.
3. SMOOTH AND FIRM SEEDBED; APPLY SEED AT THE RATE(S) SPECIFIED BELOW. COVER SEED WITH NOT MORE THAN 1/4" OF SOIL.
   APPLY APPROPRIATE SEED MIXTURE PER THE FOLLOWING:
   PERMANENT SEEDING
   30% CREEPING RED FESCUE
   35% SHAMROCK KENTUCKY BLUEGRASS
   35% ALL–SPORT PERENNIAL RYE
   APPLICATION RATE: 5 LB.s/1000 SF
   TEMPORARY SEEDING (WINTER SOIL PROTECTION)
   ANNUAL RYE OR PERENNIAL RYE
   APPLICATION RATE: 2 LB.s/1000 SF
4. MULCH IMMEDIATELY WITH HAY FREE FROM WEED SEEDS AT A RATE OF 3 BALES/1000 SF.

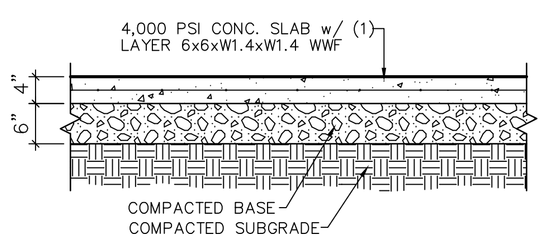

CONCRETE WALK PAVEMENT

N.T.S.

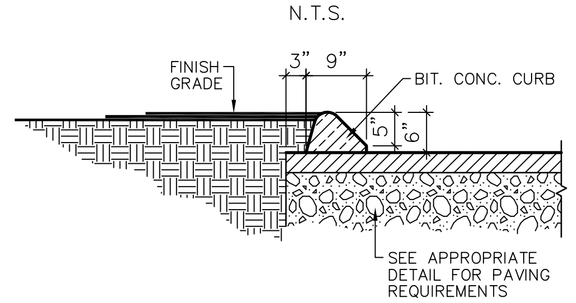

BITUMINOUS CONCRETE CURB

N.T.S.

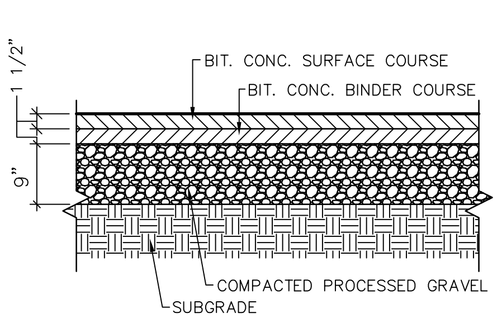

BITUMINOUS CONCRETE PAVEMENT

N.T.S.

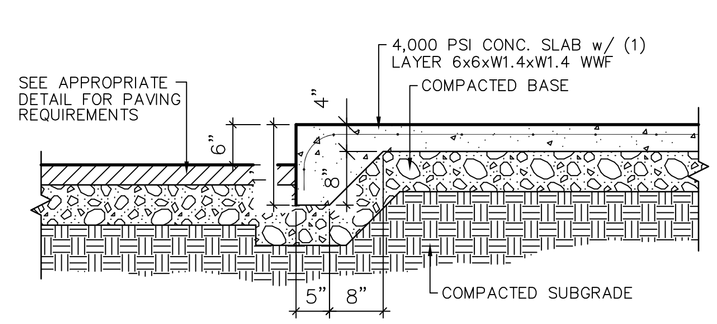

MONOLITHIC CONCRETE CURB

N.T.S.

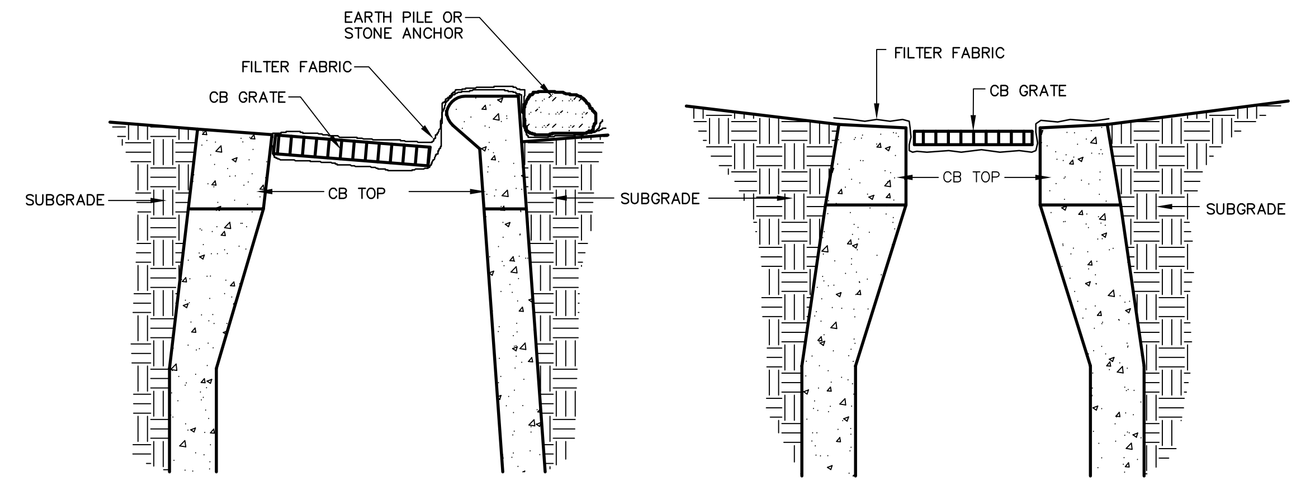

NOTE:
REMOVE CB GRATE; PLACE FILTER FABRIC; REPLACE GRATE, TAKING CARE NOT TO DAMAGE FILTER FABRIC. ANCHOR w/ STONE OR EARTH PILE

TYPE "C"

NOTE:
REMOVE CB GRATE; PLACE FILTER FABRIC; REPLACE GRATE, TAKING CARE NOT TO DAMAGE FILTER FABRIC.

TYPE "CL"

FILTER FABRIC SILT BARRIER AT CATCH BASIN

N.T.S.

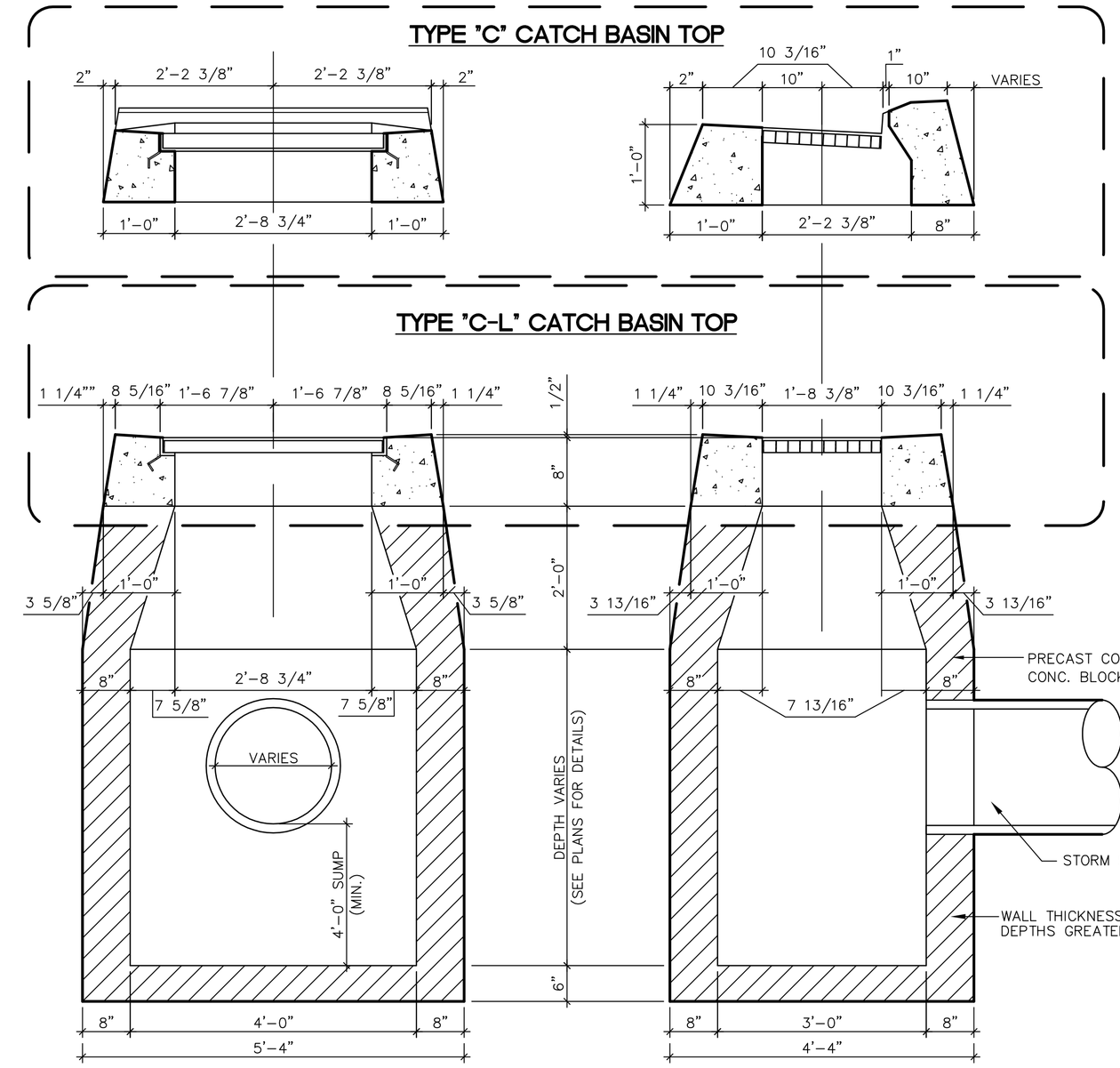

LONGITUDINAL SECTION

TRANSVERSE SECTION

STATE OF CONN. CATCH BASIN

N.T.S.

© BORGHESI BUILDING & ENGINEERING CO., INC.
COPYRIGHT, ALL RIGHTS RESERVED. NO PART OF THIS WORK MAY USED, REPRODUCED, DISTRIBUTED, DISPLAYED, OR OTHERWISE COMMUNICATED IN ANY FORM OR BY ANY OTHER MEANS WITHOUT THE PRIOR WRITTEN CONSENT OF BORGHESI BUILDING & ENGINEERING CO., INC.

\\tsclient\P\Drawings\MISC\Northwest Hills C–D–R–Jeep–2022\Northwest Hills C–D–R–Jeep–2022 SPD.dwg 3/7/2023 10:48:43 AM EST

Borghesi Building & Engineering Co., Inc.

SEAL

REVISIONS

PROJECT
NORTHWEST HILLS
CHRYSLER-RAM-DODGE-JEEP
2033 EAST MAIN STREET (US RT 202) TORRINGTON, CT

DRAWN BY	D.A.N.
APPROVED BY	J.H.P.
DATE	3/07/23
SCALE	NTS

2155 EAST MAIN STREET, TORRINGTON, CT 06790
860-482-7815/FAX: WWW.BORGHESIBUILDING.COM

SHEET NO.
SPD1